CONSTR. NO. 80001-3152-44

PROJECT NO.	YEAR	SHEET NO.
IR-40-5(91)257	1989	

REVISIONS

NO.	DATE	BY	BRIEF DESCRIPTION
1	6/12/89	WHP	ELIMINATED PREVIOUS NOTE, ADDED NEW NOTE
2	9/29/89	DWT	Constr. Jt. Added

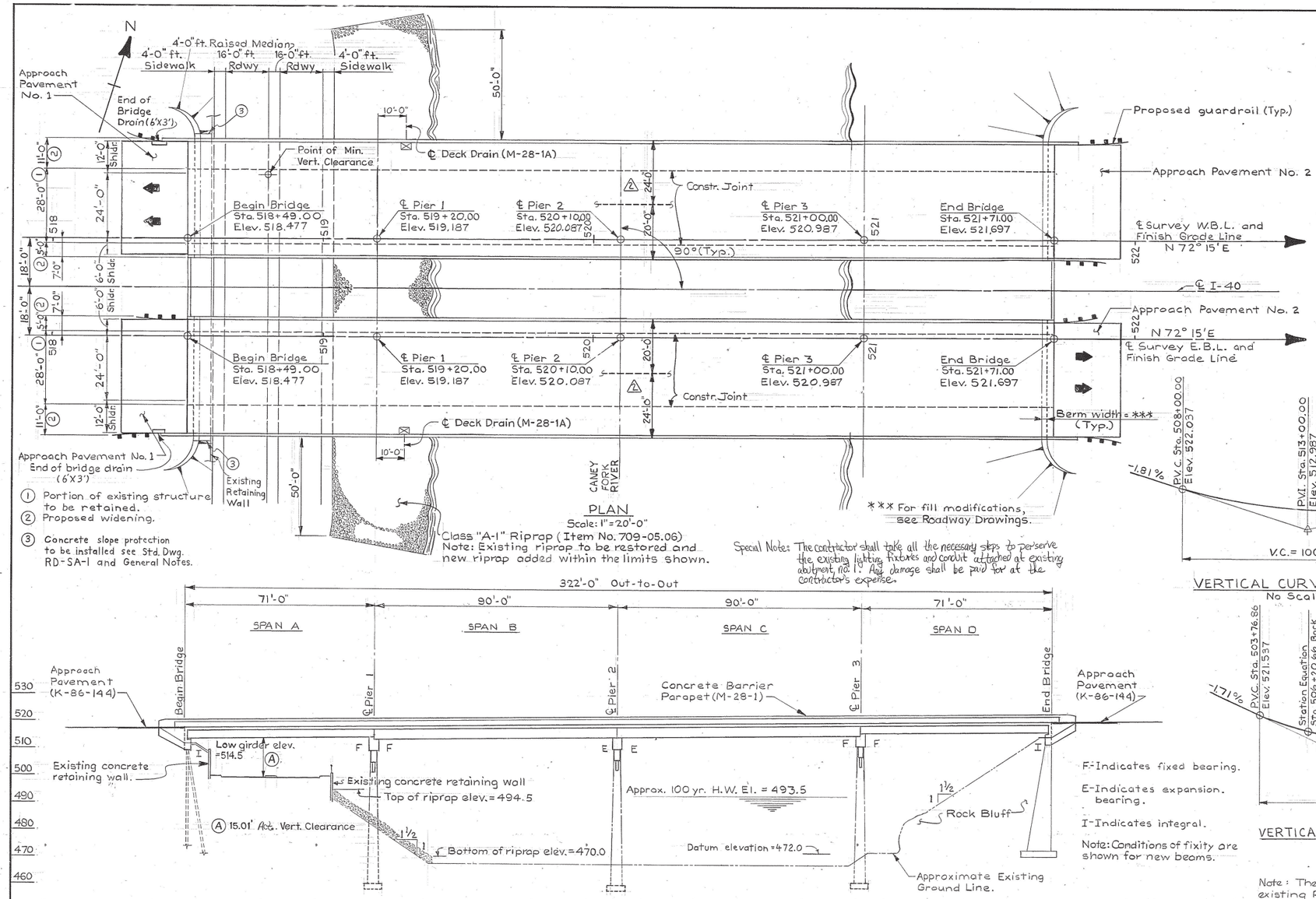

① Portion of existing structure to be retained.
② Proposed widening.
③ Concrete slope protection to be installed see Std. Dwg. RD-SA-1 and General Notes.

PLAN
Scale: 1" = 20'-0"

Special Note: The contractor shall take all the necessary steps to preserve the existing lighting fixtures and conduit attached at existing abutment no. 1. Any damage shall be paid for at the contractor's expense.

Bench Mark:
Top of wing Leftside of Abutment No. 1 - EBL
Elev. = 518.91.

Notes:
For Roadway Data not shown, see Roadway Plans.

➡ Denotes direction of one lane of traffic.

⚠ NOTE: FOR CONSTRUCTION SEQUENCE SEE DWG. NO. M-214-59A.

2009 ADT = 30,000

Design Velocity = 65 mph

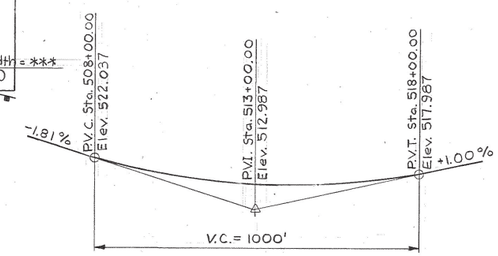

VERTICAL CURVE DATA E.B.L.
No Scale

Note: The contractor shall perform all possible work as determined by the engineer prior to traffic being detoured.

F-Indicates fixed bearing.

E-Indicates expansion bearing.

I-Indicates integral.

Note: Conditions of fixity are shown for new beams.

ELEVATION
Scale: 1" = 20'-0"

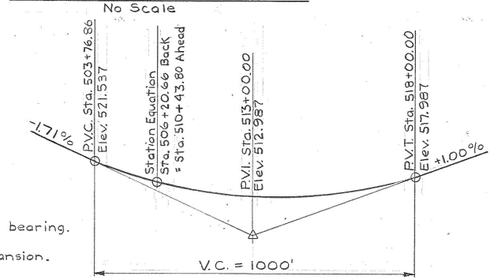

VERTICAL CURVE DATA W.B.L.
No Scale

Note: The grades shown are based on existing Plans grade plus .417' and shall be used for bridge construction only.

HYDRAULIC DESIGN DATA

Drainage Area	=	169.0 Sq. Miles
Design Discharge (100 yr.)	=	30,000 cfs
Area below 100 yr. Elevation	=	5,000 sq. ft.
Velocity (100 yr.)	=	6.0 fps
Roadway Overtopping Elev.	=	515.7

WILLIAM S. HUFFSTETLER REGISTERED ENGINEER No. 019919 STATE OF TENNESSEE

Wilbur S. Huffstetler

WILBUR SMITH ASSOCIATES

BRIDGE NO. 6

STATE OF TENNESSEE
DEPARTMENT OF TRANSPORTATION
BUREAU OF HIGHWAYS

LAYOUT OF BRIDGE WIDENING
I-40 OVER
CANEY FORK RIVER
STA. 518+49.00 ℄ SURVEY E.B. & W.B. I-40
BRIDGE ID # E.B.L. 80100400035
BRIDGE ID # W.B.L. 80100400036
SMITH COUNTY
1989

DESIGNED BY	DWT	DATE	9-88
DRAWN BY	HJK	DATE	9-88
SUPERVISED BY	WSH	DATE	9-88
CHECKED BY	DWT	DATE	9-88

CORRECT _____ ENGINEER OF STRUCTURES

APPROVED _____ DIRECTOR OF HIGHWAYS

M-214-153

CLASS "A", GRADING "D" = 30 C.Y.

W.S.A. No.: DTNOXXO24A

ZFHE9.24:DTNOXXO24.DGN
DTNOXX
8-MAR-1989 15:01

LIST OF DRAWINGS

	DRAWING NO.	LATEST REV. DATE
Layout of Bridge Widening	M-214-153	
General Notes	M-214-154	
Estimated Quantities	M-214-155	
Repair Details	M-214-156	
Superstructure Details	M-214-159	
Prestr. Conc. Box Beam spans A&D	M-214-160	
Prestr. Conc. Box Beam spans B&C	M-214-161	
Abutment Details (1)	M-214-162	
Abutment Details (2)	M-214-163	
Abutment Details (3)	M-214-163A	
Pier 2 W.B.L. & E.B.L.	M-214-164	
Piers 1,2 & 3 W.B.L. & E.B.L.	M-214-164A	
Piers 1 & 3 W.B.L. & E.B.L.	M-214-164B	
Bill of Steel	M-214-165	
Bill of Steel	M-214-166, 166A △1	
Bar Bending Details	M-214-167	
⊗ CONSTRUCTION SEQUENCE	M-214-59A △1	
** Existing Bridge Drawings	G-15-127 thru G-15-137, G-10-99	

** Note: Only Existing Dwg. G-15-127 to be printed with Plans

Note: Drawing Nos. M-214-157 & M-214-158 not used.

STANDARD DRAWINGS

Std. Reinf. Bar Support	K-80-14	08-27-76
Misc. Abutment & Drainage Details	K-85-150	06-25-87
Pneumatic Concrete Repairs	K-86-4	02-05-73
Reinf. Concrete Pavement at Bridge Ends	K-86-144	07-17-81
*Bridge Railing-Concrete Parapet	M-28-1	11-01-88
*Concrete Median Barrier and Parapet Drains	M-28-1A	09-08-87
~~Guardrail Attachment to Bridges~~	~~M-131-143~~	
Slope Protection	RD-SA-1	01-31-84

* Asterisk denotes these standards to be printed with plans.

LIST OF SPECIAL PROVISIONS

SPECIAL PROVISION NUMBER	Date LATEST REVISION	LIST OF SPECIAL PROVISIONS
105A	07-21-87	Regarding Approval of Shop Drawings
602	~~05-30-85~~ 05-15-89	Regarding Section 602 Steel Structures
603A	11-01-88	Regarding Painting
604	11-06-87	Regarding Concrete Structures
604C	01-26-88	Regarding Structural Concrete
604R	01-20-89	Regarding Rideability of Bridge Decks and Roadway Approaches
~~607D~~	~~02-20-85~~	~~Regarding Side Drains and Bridge Drains~~
709	05-04-87	Regarding Machined Rip-Rap
907A	03-25-85	Regarding Epoxy Coated Reinforcing Steel

△1 ① Stage Construction - Abutments Bridge No. 1, 3 & 6 M-214-52A

DESIGNED BY HDL DATE 12/88
DRAWN BY TLK/EAB DATE 12/88
SUPERVISED BY WSH DATE 12/88
CHECKED BY HDL DATE 3/89

GENERAL NOTES

SPECIFICATIONS: Standard Road and Bridge Specifications of the Tennessee Department of Transportation. (March 1981 Edition)

LOADING: HS20-44 with Alternate Military.

DESIGN SPECIFICATIONS: AASHTO 1983 Edition with addenda.

CONCRETE: To be class 'A'. f'c to be 4,500 psi for superstructure concrete and 3,000 psi for substructures and parapets.

Class A Concrete for bridge decks shall be in accordance with Section 604 of the Standard Specifications except as modified by Special Provisions 604-C.

BRIDGE DECK SURFACE FINISH: To be in accordance with Note (C) sheet 2, of Special Provisions 604.

BRIDGE DECK FORMS: Bridge Deck Forms for concrete decks shall be constructed using removable forms only. The contractor shall take steps to assure the stability of the exterior girder against twisting or overturning during slab pouring operations. When the width of the overhang exceeds the depth of the exterior girder, details and design calculations for the cantilever support system shall be submitted to the Engineer for approval.

REINFORCING STEEL: To be ASTM A615 Grade 60. Standard CRSI hook details apply unless otherwise noted on Bill of Steel. Spacing dimensions are center to center and cover dimensions are clear distance unless otherwise noted. Placing Tolerances are +/-1/2" for spacing and -1/8" or + 3/8" for cover. The suffix E, for bars so marked, denotes epoxy coated reinforcement. See Special Provisions 907A.

BRIDGE RAIL SYSTEM: Build parapets according to Standard DRAWING M-28-1.

GROUTED BARS IN DRILLED HOLES: Horizontally drilled holes shall be drilled 1/2" in diameter larger than the bar, cleaned, packed with non shrink grout and driven to its seat. Vertically drilled holes shall be drilled 1/4" in diameter larger than the bar, cleaned, packed with epoxy grout and driven to its seat. All grouting material shall be approved by T.D.O.T. Materials and Tests.

SHOP DRAWINGS: See Special Provision No. 105A.

DRILLED-IN ANCHORS:
Certification: The contractor shall furnish certified anchor pull out data from an independent testing laboratory using Class 'A' concrete as prescribed by Tennessee Highway Specifications. The required ultimate load for 7/8" dia. Anchor is 19,000 lbs., 18,000 lbs. for 3/4" dia. Anchors, 12,000 lbs. for 5/8" dia. Anchors and 9,000 lbs. for 1/2" dia. Anchors. In Place Requirements: The units shall be sub-set 3/32" to 1/4" and torqued, with base plate in place, to an equivalent direct pull out load of 60 percent of required ultimate load. Slippage shall not exceed 1/4". The Department will perform testing of Anchors on site to insure the specified in place requirements. Installations not meeting these requirements must be corrected at the contractors expense.

NON-PAY ITEMS: Only items shown on the proposal as pay items will be paid for. Compensation for all labor, materials, tools, equipment, and incidentals for the entire contract shall be included in the price bid for pay items.

FINISHING CONCRETE SURFACES: Concrete finishing shall be in accordance with Section 604.22 of the Tennessee Standard Specification. An Applied Texture Finish shall be used in lieu of a Class II finish. The color of the finish shall be similar to Mountain Grey, Federal Specification No. 36440, Federal Color Standard No. 595a, and a color sample shall be submitted to the Engineer for approval. No texture finish shall be applied prior to completion of paving and hauling operations at the bridge site. Payment for the Applied Texture Finish shall be under Item 604-04.01 & 604-04.02.

NOTE: The Contractor shall check the location of all existing substructures and verify span lengths before fabricating girders.

RIP-RAP: Machined rip-rap shall be Class A-1 in accordance with Special Provision 709 and shall be paid for under Item 709-05.06 - Ton.

REINFORCED CONCRETE SLOPE PAVING: Pave slopes and exposed earth under bridges with 4" thick cement concrete slab reinforced with No. 4 gage wire fabric @ 6' centers and 58 lb. per 100 s.f. The wire fabic reinforcement shall be placed at one-half the depth of the slab and extend to within 3" of its edge with a 12" lap required on all sheets. The cost of the wire fabric reinforcement to be included in the unit price bid for Item 709-04, Reinforced Concrete Slope Pavement. One-half inch premoulded expansion joints without load transfer shall be formed about all structures and features projecting through, in or against the slab. The slab shall be grooved parallel with and at right angles to the under roadway center line at 6' centers. Depth of groove to be not less than 1". See Std. Drawing RD-SA-1 for limits of slope protection.

STRUCTURAL STEEL: See notes on Drawing No. M-214-164A.

WELDING: See Special Provisions No. 602 and notes on Drawing No. M-214-164A.

PAINT: System B - Inorganic zinc - Urethene Finish Bright Green Top Coat - See Tennessee Standard Specification 603.05(b) and Special Provision 603A.

RADIOGRAPHIC, ULTRASONIC, AND MAGNETIC INSPECTION: See Special Provision No. 602. Notes on Drawing No. M-214-164A.

STEEL STRUCTURES: See Tennessee Standard Specifications Section 602 and notes on Drawing No. M-214-164A.

NOTE: The Contractor shall accept full responsibility of maintaining the structural integrity of the existing bridge during construction. Any damage to structural members to be left in place shall be repaired to the satisfaction of the Engineer and paid for at the Contractor's expense.

TESTING MECHANICAL COUPLERS

In addition to the requirements stated elsewhere within these plans, the Contractor will prepare, under field conditions, two (2) specimens of each size utilized. This will be in addition to required certifications. Each coupled rebar in the specimens shall be a minimum of 30 inches in length. The Department will test, at their discretion, each specimen to 125% of the specified tension yield strength of the rebar prior to coupler approval.

CONSTR. NO. 80001-3152-44

PROJECT NO.	YEAR	SHEET NO.
IR-40-5(91)257	1989	

REVISIONS

NO.	DATE	BY	BRIEF DESCRIPTION
1	6/12/89	WHP	ADDED DWG. NO. M-214-59A
△	9/25/89	DWT	M-214-52A & M-214-166A Added

Note:
Textured Coating shall be applied as shown to areas of superstructure and substructure exposed to view, including Abutments and Wingwalls.

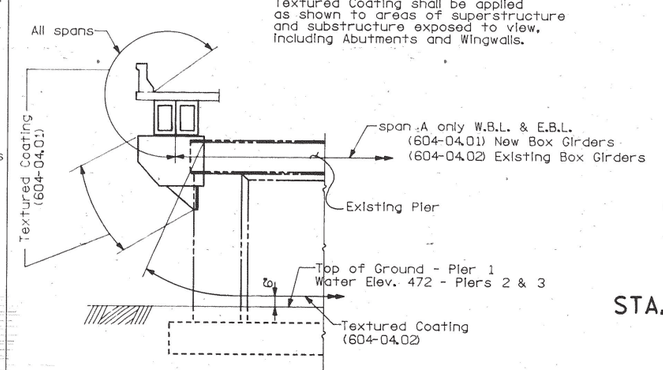

DETAIL SHOWING LIMITS OF TEXTURED COATING

STATE OF TENNESSEE
DEPARTMENT OF TRANSPORTATION
BUREAU OF HIGHWAYS

GENERAL NOTES
I-40 OVER CANEY FORK RIVER
STA. 518+49.00 ℄ SURVEY
E.B. & W.B. I-40
SMITH COUNTY

CORRECT _____ ENGINEER OF STRUCTURES

APPROVED _____ DIRECTOR OF HIGHWAYS

M-214-154

U.S.A. No.: DTNOXX025A

ZFH58.24 DTNOXX025.DGN
DTNOXX
8-MAR-1989 13:42

(1) NOTE: Square yard for pavement at bridge ends shall be measured as road surface area and shall include all concrete, reinforcing steel, piles, joint material, notch for roadway drain, surface finish as per SP604 and any other incidentals necessary for complete installation.

(2) NOTE: Cost of 2 bridge deck drains to be included in the unit price bid for Class 'A' Concrete (Bridge Deck). For Drain Locations, see Dwg. No. M-214-153.

(3) NOTE: Cost of Elastomeric pads, rubber bonding cement, and dowel bars to be included in the cost of prestressed beam.

(4) NOTE: The cost of 14 insert assemblies and 56-7/8" dia. x 4" hex head bolts, (A307), to be included in item M-28-1.

(5) NOTE: The cost of removing the exterior portion of the existing slab, portions of the existing abutment, and the bridge rail shall be included in the unit price bid for item 202-04.06.

(6) All reinforcing steel in the parapet shall be epoxy coated. Cost to be included in the price bid for item 620-03.

(7) The cost of removing any existing asphalt overlay shall be included in the unit price bid for scarifying.

(8) NOTE: Cost of polyethylene sheeting and all miscellaneous items necessary for installation to be included in cost of perforated Pipe.

(9) Bridge ID# - E.B.L. 80I00400035(Sta. 518+49.00)
Bridge ID# - W.B.L. 80I00400036(Sta. 518+49.00)

(10) Support frames for Pier Extension.

(11) Note: Items 604-10.30, 604-10.42, 604-10.50, 622-01 and 709-05.06 shall be bid with the contingency that these items may be increased, decreased or eliminated by the Engineer.

(12) Excavation based on existing ground.

(13) For sketches and notes on Concrete Repair, see drawing No. M-214-156.

(14) The use of a ramhoe is prohibited for removal of concrete. See notes on Dwg. No. M-214-156.

(15) ~~Guardrail attachment to bridge rail post shall be prior to all traffic being detoured onto Westbound Bridge. All materials, labor, etc. for installation shall be included under item 705-10.23.~~

(16) Includes quantities for Abutment Sub-beam, see Dwg. M-214-156.

CONSTR. NO. 80001-3152-44

PROJECT NO.	YEAR	SHEET NO.
IR-40-5(91)257	1989	

REVISIONS

NO.	DATE	BY	BRIEF DESCRIPTION
1	9/29/89	DWT	Revised Rebar

ESTIMATED QUANTITIES

	BID ITEM NO. / ITEM / STRUCTURE	202-04.06 REMOVAL OF STRUCTURES (5)(9)(14) L.S.	204-02.01 DRY EXCAVATION (BRIDGES) (12) C.Y.	602-02.06 STRUCTURAL STEEL (9)(10) LB.	604-01.12 CLASS 'A' CONCRETE (BRIDGE DECK) (2) ⚠ C.Y.	604-02.03 EPOXY COATED REINFORCING STEEL (16) LB. ⚠	604-03.01 CLASS 'A' CONCRETE (BRIDGES) (16) C.Y. ⚠	604-03.02 STEEL BAR REINFORCEMENT (BRIDGES) LB. ⚠	604-03.04 PAVEMENT AT BRIDGE ENDS (1) S.Y.	604-04.01 APPLIED TEXTURE FINISH (NEW STRUCTURES) S.Y.	604-04.02 APPLIED TEXTURE FINISH (EXISTING STRUCTURES) S.Y.	604-10.30 BRIDGE DECK REPAIR (FULL DEPTH) (11)(13) S.Y.	604-10.42 CONCRETE REPAIRS (11)(13) C.F.	604-10.50 BRIDGE DECK REPAIR (PARTIAL DEPTH) (11)(13) S.Y.	604-36 SCARIFYING (7) S.Y.	615-02.04 PRESTRESSED CONCRETE BOX BEAM (27" X 36") (3) L.F.	615-02.21 PRESTRESSED CONCRETE BOX BEAM (39" X 36") (3) L.F.	620-03 CONCRETE PARAPET (M-28-1) (4)(6) L.F.	622-01 PNEU-MATICALLY PLACED CONCRETE (11)(13) S.F.	~~705-10.23 GUARDRAIL ATTACHMENT TO BRIDGE RAIL POST (15) L.F.~~	709-04 REINFORCED CONCRETE SLOPE PAVEMENT C.Y.	709-05.06 MACHINED RIP-RAP (CLASS A-1) (11) TON	710-09.01 6" PERF. PIPE WITH VERTICAL DRAIN SYSTEM (8) L.F.	710-09.02 6" PIPE UNDERDRAIN (8) L.F.
WEST BOUND LANE	Superstructure				311	49168				988	517		3			280	359							
	Abutment 1		59		14	1654	9	2342		6	23								80				60	12
	Pier 1			3600			14	2660		29	312													
	Pier 2			3600			13	2583		29	313													
	Pier 3			3600			14	2660		29	325		1											
	Abutment 2		47		11	2254	7	5176		10	28												60	12
	Subtotal	.5	106	10800	336	53076	57	15421	220	1091	1518	12	4	115	1145	280	359	658	80		17	70	120	24
EAST BOUND LANE	Superstructure				311	49168				988	517		1			280	359							
	Abutment 1		59		14	1654	9	2342		6	23												60	12
	Pier 1			3600			14	2660		29	312		5						20					
	Pier 2			3600			13	2583		29	313								160					
	Pier 3			3600			14	2660		29	325								80					
	Abutment 2		47		11	2254	7	5176		10	28												60	12
	Subtotal	.5	106	10800	336	53076	57	15421	220	1091	1518	11	6	115	1145	280	359	658	260		17	70	120	24
	Totals	1.0	212	21600	672	106152	114	30842	440	2182	3036	23	10	230	2290	560	718	1316	340		34	140	240	48

STATE OF TENNESSEE
DEPARTMENT OF TRANSPORTATION
BUREAU OF HIGHWAYS

ESTIMATED QUANTITIES
I-40 OVER
CANEY FORK RIVER
STA. 518+49.00
℄ SURVEY E.B. & W.B. I-40
SMITH COUNTY

DESIGNED BY HDL DATE 12/88
DRAWN BY TLK/EAB DATE 12/88
SUPERVISED BY WSH DATE 12/88
CHECKED BY HDL DATE 3/89

CORRECT _____ ENGINEER OF STRUCTURES
APPROVED _____ DIRECTOR OF HIGHWAYS

M-214-155

W.S.A. No. DTN0XX703A

ZFILE(L,24)DTN0XX703.DGN(L) DTN0XX 9-MAR-1989 09:07

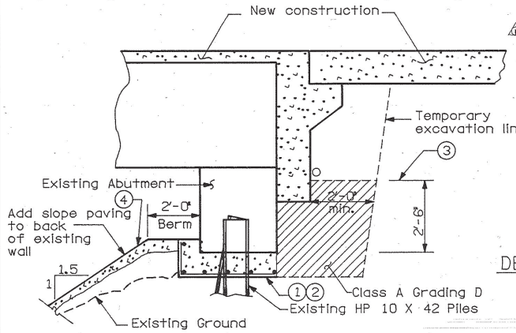

SECTION THRU W.B.L. ABUTMENT 1

SECTION THRU E.B.L. ABUTMENT 1

Note: Temporary shoring maybe required in order to accomplish phase construction.

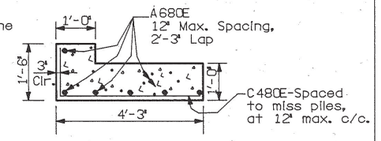

DETAILS OF NEW ABUTMENT SUB-BEAM

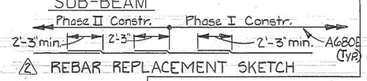

REBAR REPLACEMENT SKETCH

NOTES:

1. Before addition of new approach pavement, backfill shall be excavated sufficient to expose front and back of all piles. Vehicular and construction loads will not be permitted on the constructed portion of the bridge during this operation. Corroded areas shall be wire brushed or blast cleaned and repainted per Specification Section 606.19. No separate payment will be made for painting or cleaning.
2. Construct abutment sub-beam using Class 'A', f'c=3,000 psi concrete. Sub-beam shall be cast full length of exisiting retained abutment beam and to the depth specified, unless otherwise directed by the Engineer. Cost of material and labor shall be included in the bid items 604-03.01 and 604-02.03.
3. Backfill to limit shown with Class A Grading D Material. Install backfill and underdrain in compliance with Std. Drawing K-85-150.
4. Reestablish fill slope to lines shown. Add concrete slope paving per Std. Drawing RD-SA-1. Construction of slope paving to be in accordance with General Notes.

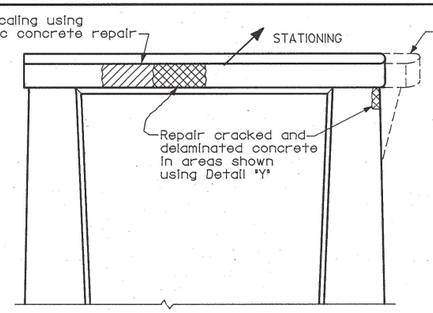

E.B.L. PIER 1 REPAIR

(Looking in Direction of Stationing)

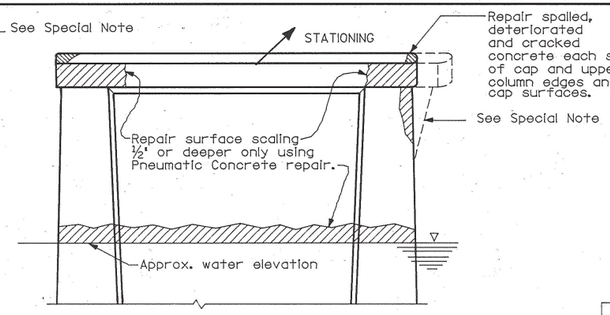

E.B.L. PIER 2 REPAIR

(Looking in Direction of Stationing)

CONSTR. NO. 80001-3152-44

PROJECT NO.	YEAR	SHEET NO.
IR-40-5(91)257	1989	

REVISIONS

NO.	DATE	BY	BRIEF DESCRIPTION
1	6/16/89	WHP	Goodland Raised Dates
2	5/25/89	DWT	Sketch Added

SPECIAL NOTE

Necessary concrete repairs at piers of this bridge shown before the addition of the cantilever beam bracket. In general, these repairs which may be conflicting or may be obscured by the angle strap will be required to be completed before the addition of the angle support frame and the concrete bracket. However, the necessary surface removal and chipping for the bracket addition will override or preclude the need for surface repairs to some end portions of these piers. The Contractor need not first perform surface or other damage repair within the area limits scheduled for the bracket addition of its strap tie system, as shown by relevant details within these plans. Where these repair details overlap the 'footprint' of the bracket addition, the resulting construction shall have neat and appropriately formed lines and surfaces, regardless of the order of construction. The Contractor will not be paid for any surface repairs within the area bounded by the bracket connection to each pier.

PNEUMATIC CONCRETE REPAIR

Denotes: Areas for pneumatic concrete repair. The areas to be repaired will be sufficiently larger than the spalled areas to insure that patches extend into sound concrete. Care shall be taken when removing existing deteriorated concrete in repair areas so as not to damage existing reinforcing steel. All existing reinforcing exposed shall be blast cleaned to remove all rust before placement of pneumatic concrete.

See Tennessee Standard Specifications Section 622 Pneumatically Placed Concrete and Standard Drawing K-86-4.

Cost of removing all unsound and deteriorated concrete, placing of pneumatic concrete, and all labor and materials necessary for completing the work shall be paid for under Item no. 622-01 Pneumatically Placed Concrete, sq. ft.

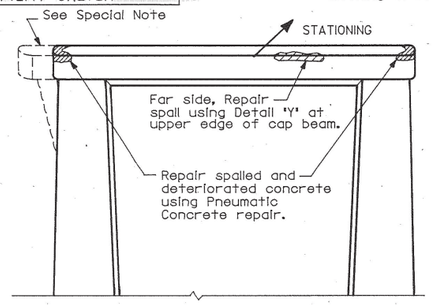

W.B.L. PIER 3 REPAIR

(Looking in Direction of Stationing)

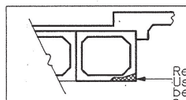

Repair beam breakout using Detail 'Y'. Use extreme care to avoid damaging beam strand beyond present corrosion. See existing plans for beam details.

SECTION THRU E.B.L. SPAN 1 EXISTING BM "H" (OUTSIDE BEAM)

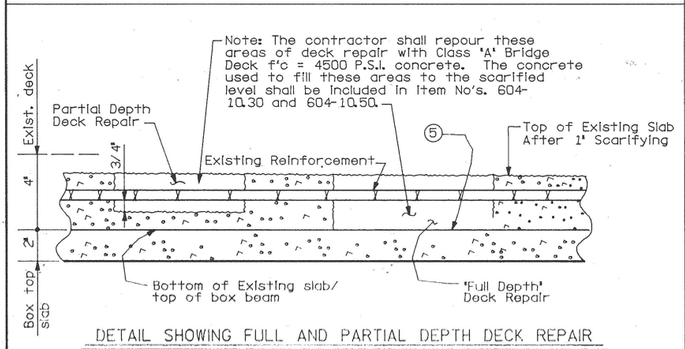

DETAIL SHOWING FULL AND PARTIAL DEPTH DECK REPAIR

Remove Concrete in all delaminated areas to a depth of 3/4" below the top mat of Reinforcing steel. All reinforcing steel in areas of deck repair shall be blast cleaned. Areas of concrete removed shall be designated by personnel from the Division of Structures. Deck repair will be paid for under Item No. 604-10.50, Bridge deck repair, (partial depth of slab) S.Y. If deteriorated concrete is encountered which appears to run full depth of slab, the Engineer may designate these areas to be repaired under Item No. 604-10.30, Brige deck repair, (full depth of slab), S.Y. Power driven hand tools used for removal of unsound concrete in making partial depth repairs are subject to the following restrictions: 1) Pneumatic Hammers heavier than 35 pound class shall not be used. 2) Chipping hammers of the 15 pound class shall be used to remove concrete from beneath any reinforcing steel, and within 1' of top of box beam.

(5) The Contractor is advised to use extreme care during any attempted full-depth removal, to avoid damaging existing box beam surfaces. Max. depth of box slab chipping shall not exceed ½ inch.

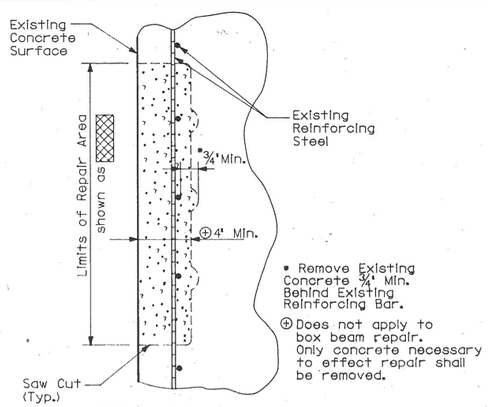

DETAIL "Y"

DETAIL SHOWING EXISTING CONCRETE SURFACE TO BE REPAIRED

NOTES FOR DETAIL Y:

Care shall be taken when removing existing deteriorated concrete in designated repair areas so as not to damage the existing reinforcing steel. All existing reinforcing steel shall be blast cleaned to remove all rust before pouring new concrete.

Concrete for the repaired areas shall be high early strength, f'c = 3,000 p.s.i.; Type III cement shall be used in lieu of Type I cement. ~~No traffic or other loading will be allowed on the repaired areas until 10 calender days have elapsed and representative test specimens have attained a compressive strength of not less than 3,000 p.s.i.~~

Cost of removing deteriorated concrete, all blast cleaning, forming, high early strength concrete, labor and all additional materials necessary to complete the repairs as shown in detail shall be included under Item No. 604-10.42, Concrete Repairs, C.F..

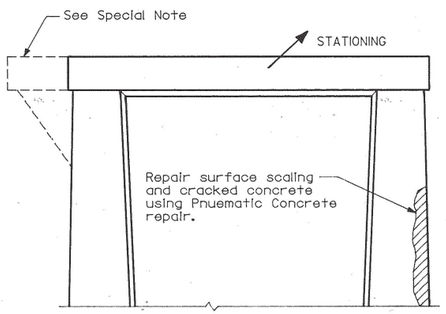

W.B.L. PIER 1 REPAIR

(Looking in Direction of Stationing)

Where cracking and staining indicate strand corrosion is evident, remove concrete to expose strand and repair using Detail 'Y'. Caution shall be used to insure only minimal concrete removal sufficient to expose strand(s) and permit replacement of concrete patch material. Construction or traffic loads will not be permitted over the repair area during the operation. See existing plans for beam details.

W.B.L. SPAN D BEAM SURFACE REPAIR

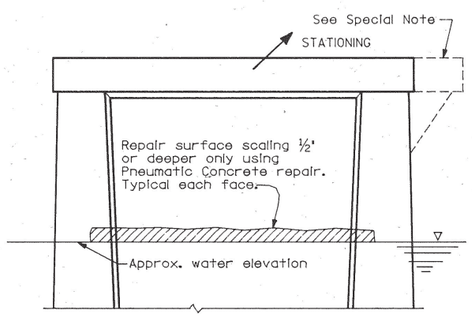

E.B.L. PIER 3 REPAIR

(Looking in Direction of Stationing)

STATE OF TENNESSEE
DEPARTMENT OF TRANSPORTATION
BUREAU OF HIGHWAYS

REPAIR DETAILS
I-40 OVER CANEY FORK RIVER
STA. 518+49.00 ℄ SURVEY
E.B. & W.B. I-40
SMITH COUNTY
1989

CORRECT _____ ENGINEER OF STRUCTURES

APPROVED _____ DIRECTOR OF HIGHWAYS

M-214-156

DESIGNED BY	WSH	DATE	1/89
DRAWN BY	TLK	DATE	1/89
SUPERVISED BY	WSH	DATE	1/89
CHECKED BY	WSH	DATE	3/89

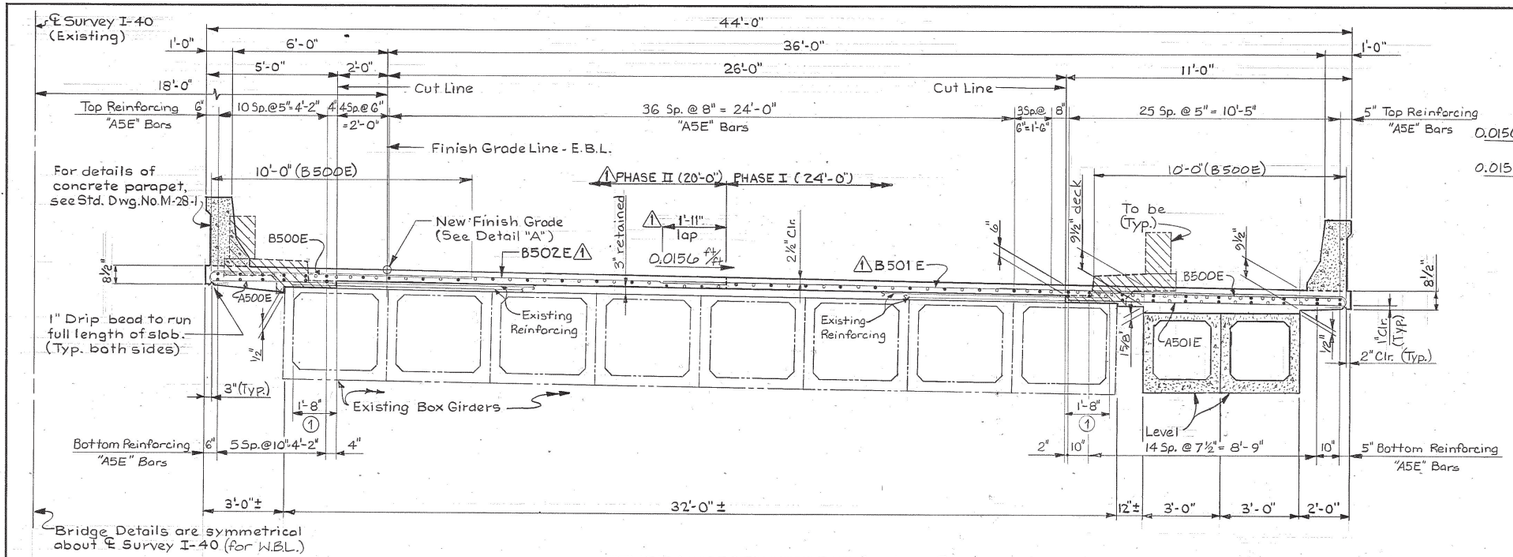

TYPICAL SECTION - E.B.L. (Looking Forward on Survey)
(W.B.L. opposite hand)
Scale: ⅜" = 1'-0"

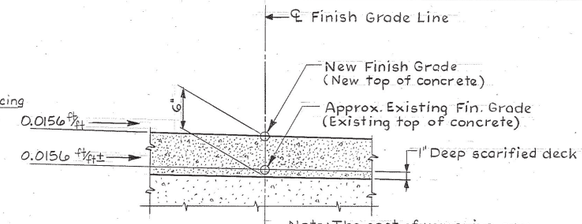

Note: The cost of removing any existing asphalt overlay shall be included in the unit price bid for scarifying.

DETAIL "A"
No Scale

Const. No. 80001-3152-44

PROJECT NO.	YEAR	SHEET NO.
IR-40-5(91)257	1989	

REVISIONS

NO.	DATE	BY	BRIEF DESCRIPTION
1	9/29/89	DWT	REVISIONS FOR CONSTR. JT.

Note:
●- Continuous longitudinal reinforcement.
o- Non-Continuous longitudinal reinforcement.

(1) Retain 1'-8" extension of transverse existing deck reinforcing into new concrete. Any existing deck bar which cannot be preserved shall be replace at the same location by drilling and grouting a 2'-8" length #4 dowel bar, embedded 12" in existing concrete, at no additional cost to the Department. Do not use precast deck panels.

1 See Drw. No. M-214-59A for Construction Joint and phase Construction Details.

Notes:
When pouring wingwalls, provisions shall be made for setting reinforcing steel for wingpost and parapet. For details of wingpost and parapet, see Std. Dwg. No. M-28-1.
When pouring deck, provisions shall be made for setting reinforcing steel for parapet. The parapet shall not be poured until the slab is poured and cured.

~~Immediately before substructure riser blocks are poured, the Contractor shall measure the actual camber of the fabricated prestressed beams and submit these measurements to the Engineer. The anticipated values for the mid-point of the beams at erection, including vertical curve correction, are as follows:~~
~~SPANS A & D - 2 5/16"~~
~~SPANS B & C - 3¼"~~ ~~Note: A positive value indicates an upward camber.~~
~~If the measured camber exceeds these anticipated values by 1" or more, corrective measures such as changes in riser block elevations and/or roadway grade must be developed by the Contractor and submitted to the Engineer for approval before any riser blocks are poured.~~
Top part of abutments shall be poured concurrently with deck slab and included in the quantity for item 604-01.02 given on abutment sheets.

ESTIMATE QUANTITIES - E.B.L. or W.B.L.	
Class "A" Concrete (Bridge Deck) C.Y.	Epoxy Coated Reinforcing Steel Lb.
311	1 49168

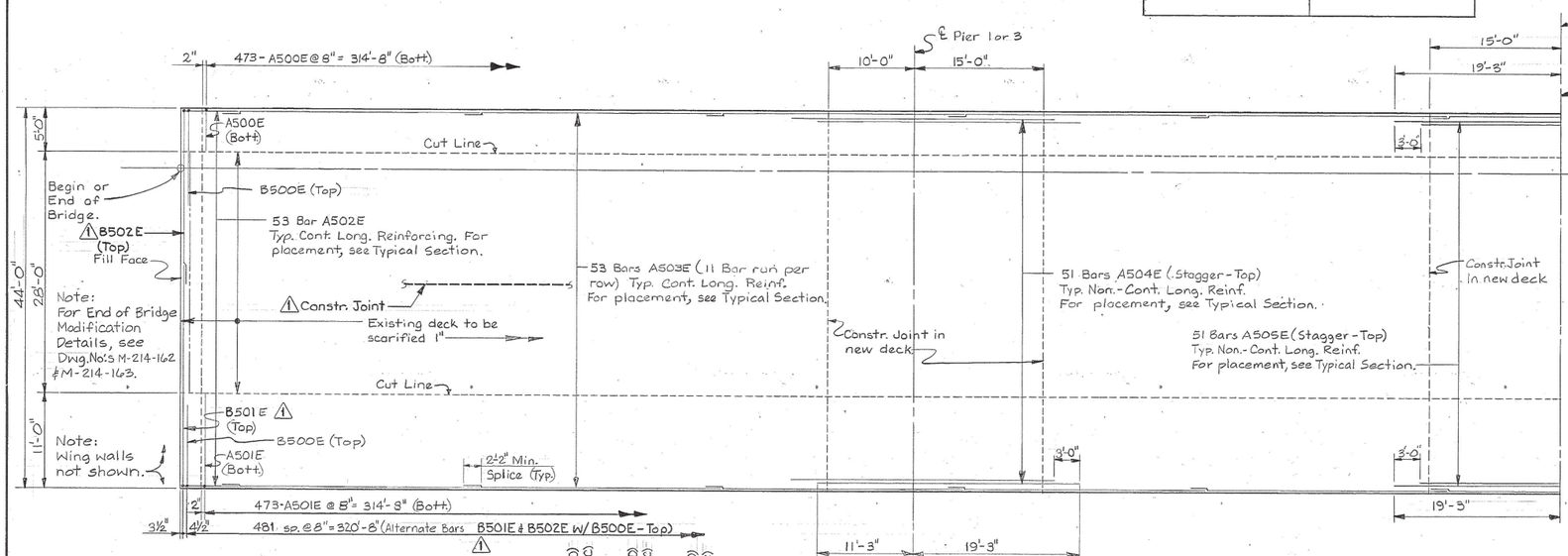

DECK PLAN - E.B.L.
(W.B.L. Similar)
No Scale

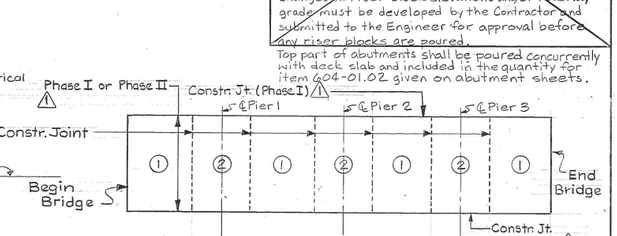

SLAB POURING SEQUENCE
No Scale
1 (E.B.L. Shown W.B.L. symetrical about ℄ I-40)

Note:
All pours are to be made in numerical sequence. Pour No. (1) in exterior spans shall proceed in a direction from midspan to the abutments. Pours with the same numerical designation may be made simultaneously. Also, Pours (1) & (2) may be made simultaneously provided the (1) sections are placed on each side of any (2) section placed during a particular pour.
No equipment shall be permitted on the bridge until all pours are made and the concrete is properly cured. All slab construction joints shall be in accordance with the Slab Construction Joint detail shown on this sheet.

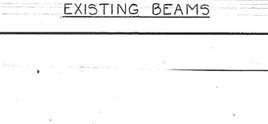

DEAD LOAD CORRECTION CURVE
EXISTING BEAMS

Note: This curve includes deflection of existing bridge under load of new deck overlay and new rails. Contractor shall use this information to make necessary screed adjustment.

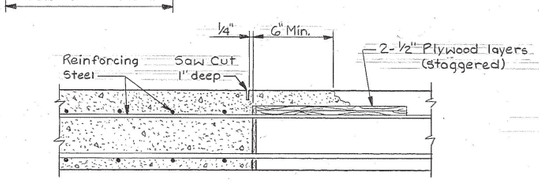

SLAB CONSTRUCTION JOINT
No Scale

STATE OF TENNESSEE
DEPARTMENT OF TRANSPORTATION
BUREAU OF HIGHWAYS

SUPERSTRUCTURE DETAILS
I-40 OVER
CANEY FORK RIVER
STA. 518+49.00 ℄ SURVEY E.B.L. & W.B.L. I-40
SMITH COUNTY
1989

DESIGNED BY	DKR	DATE	10-88
DRAWN BY	HJK	DATE	10-88
SUPERVISED BY	WSH	DATE	10-88
CHECKED BY	DKR	DATE	2-89

CORRECT _____ ENGINEER OF STRUCTURES
APPROVED _____ DIRECTOR OF HIGHWAYS

M-214-159

W.S.A. No. DTNOXX702B

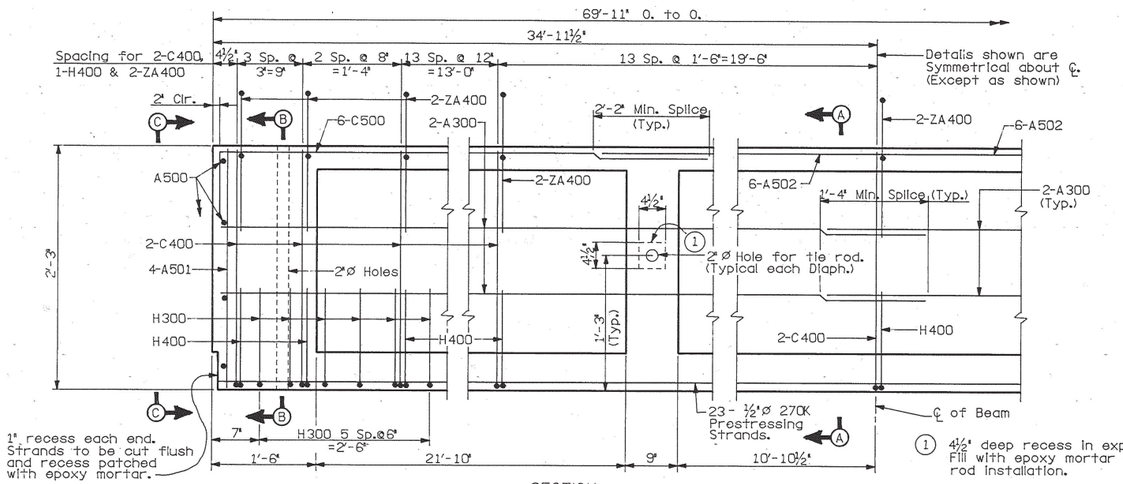

(1) 4½" deep recess in exposed face. Fill with epoxy mortar after tie rod installation.

SECTION
No Scale

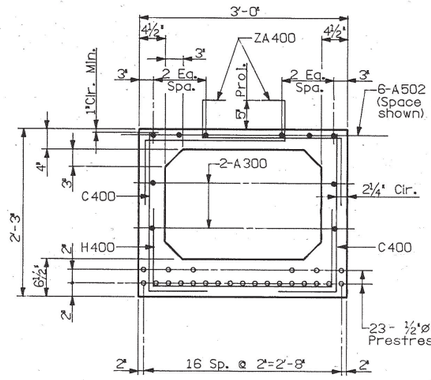

SECTION A-A
Scale: 1"= 1'-0"

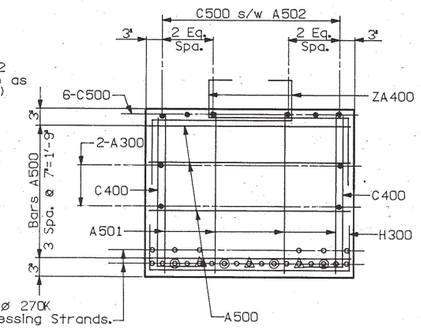

SECTION B-B
Scale: 1"= 1'-0"

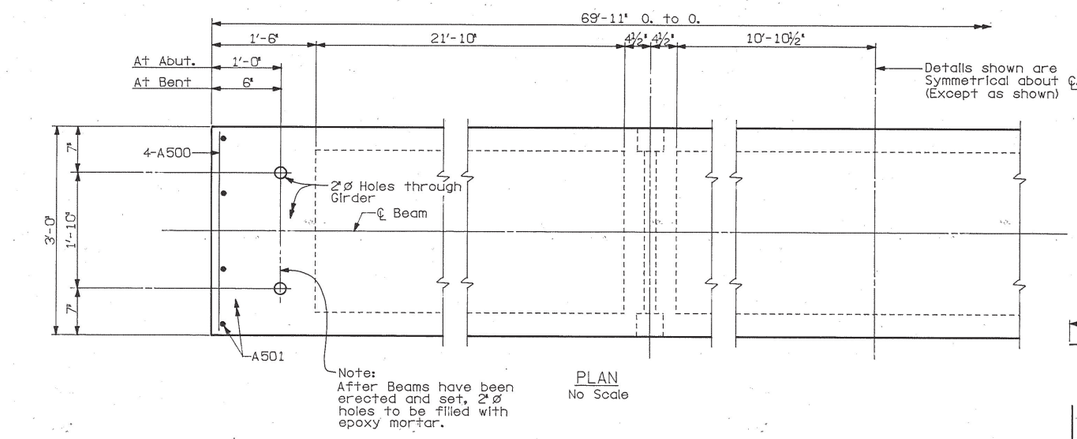

PLAN
No Scale

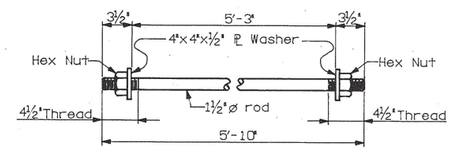

TIE ROD DETAIL

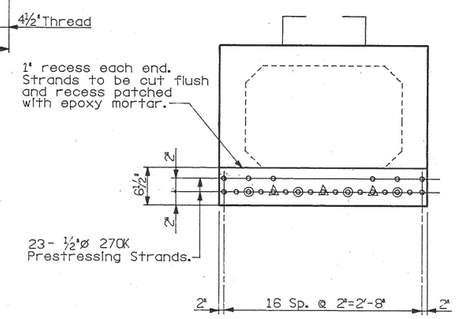

ELEVATION C-C
Scale: 1"= 1'-0"

Note:
Ⓐ - Denotes De-bonded Strand 10'-0" from each end.
◎ - Denotes De-bonded Strand 3'-0" from each end.
∘ - Denotes Prestressing strand.
• - Denotes Grade 60 Reinf.Steel.

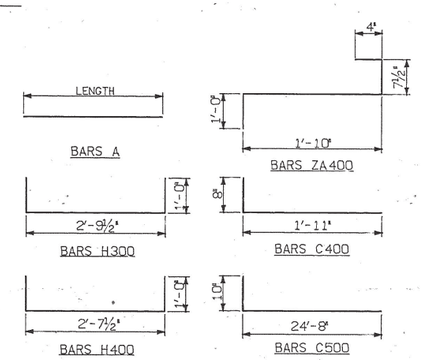

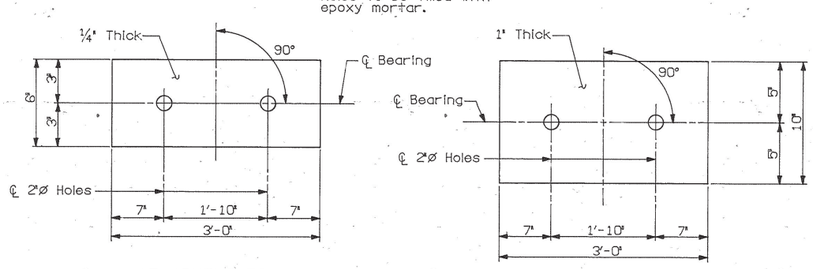

AT ABUTMENTS
(4 Req'd)

AT PIERS
(4 Req'd)

60 DURO.

DETAILS OF ELASTOMERIC BEARING PADS
No Scale

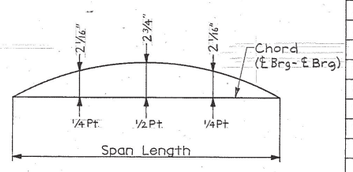

DEAD LOAD CORRECTION CURVE
(For use in field) Δ

BILL OF STEEL - ONE BEAM							
		SPAN A		SPAN D			
BARS	SIZE	NO. REQ'D	LENGTH	NO. REQ'D	LENGTH		
A300	3	8	35'-6"	8	35'-6"		
A500	5	8	2'-8"	8	2'-8"		
A501	5	8	1'-11"	8	1'-11"		
A502	5	6	24'-8"	6	24'-8"		
C400	4	128	2'-7"	128	2'-7"		
C500	5	12	25'-6"	12	25'-6"		
H300	3	12	4'-10"	12	4'-10"		
H400	4	64	4'-8"	64	4'-8"		
ZA400	4	128	3'-10"	128	3'-10"		

ESTIMATED QUANTITIES - ONE BEAM				
ITEM	UNIT	SPAN A	SPAN D	
CLASS "A" CONCRETE	C.Y.	10.3	10.3	
REINFORCING STEEL	LB.	1,390	1,390	
PRESTRESSING STRANDS	LB.	842	842	

CONSTR. NO. 80001-3152-44

PROJECT NO.	YEAR	SHEET NO.
IR-40-5(91)257	1989	

REVISIONS

NO.	DATE	BY	BRIEF DESCRIPTION
Δ	9/29/89	DWT	Revised Dead Load Correction Values

PRESTRESSED BEAM NOTES

The top of all beams are to be rough floated. At approximately the time of initial set, the top of the beams will also be scrubbed transversely with a course wire brush to remove all laitance and produce a rough surface. Where precast slab panels are to be used and set on bituminous fiberboard, the outer two inches of the top flange may be troweled.

Anchorage at the expansion end of beams accomplished by dowels 1"ø x 1'-6". Fixed end dowels to be 1"ø x 1'-6".

Mild steel reinforcing shall be ASTM A615 Grade 60.

All prestressing strands to be 1/2"ø ASTM Grade 270K, 7 wire uncoated Low relaxation prestressing strands.

An initial force at anchorage (after seating) of 31,000 Lbs., shall be applied to each strand in all beams.

1" recess shall be formed at each end of Beam and fill with epoxy mortar as shown. The prestressing strands shall be cut off flush with base of recess.

The concrete for this construction shall be of such properties as to attain a compressive strength of not less than (5,000 PSI) at the age of 28 days and stress transfer shall not be made to the bridge member until the test specimens indicate that the concrete has reached a compressive strength of at least (4,000 PSI). See General Notes for Concrete finishing note.

1"ø weep holes shall be provided at the low point of each cell. Vent holes shall be provided in the top of each cell during fabrication to relieve gas pressures that occur during curing. The vent holes shall be plugged after curing is completed.

NOTE: Cost of elastomeric pads, tie rods, dowels and rubber bonding cement to be included in the cost of prestressed beam.

The sequence for transfer of stress or the cutting strands shall be in accordance with Article 615.14 of the "Standard Specifications for Road and Bridge Construction" and shall be shown on the approved shop drawings. At no time shall more than 1/6th of the total prestressing force be eccentric about the centerline of the beam.

DEAD LOAD CORRECTION CURVE: This curve is for dead load slab and all dead loads that are applied after slab is in place and should be corrected to compensate for the effects due to vertical curve.

STATE OF TENNESSEE
DEPARTMENT OF TRANSPORTATION
BUREAU OF HIGHWAYS

PRESTRESSED BOX BEAM DETAILS
SPANS A & D (E.B.L. & W.B.L.)
I-40 OVER CANEY FORK RIVER
STA. 518+49.00 ℄ SURVEY E.B & W.B. I-40
SMITH COUNTY
1989

DESIGNED BY HIZ DATE 11-88
DRAWN BY FAB DATE 11-88
SUPERVISED BY WSH DATE 11-88
CHECKED BY HIZ DATE 1-89

CORRECT _____ ENGINEER OF STRUCTURES
APPROVED _____ DIRECTOR OF HIGHWAYS

M-214-160

ZFILE:BD_242DTNOXX702.DGN1 DTNOXX 9-FEB-1989 07:12

U.S.A. No. DTNOXX702A

ZF1:556,24:DTNOXX702-DGN1
DTNOXX
9-FEB-1989 09:44

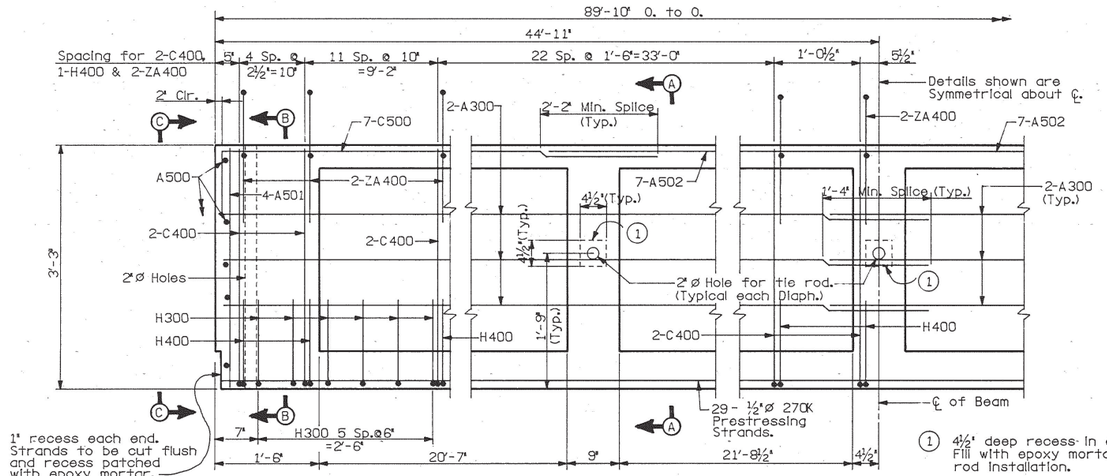

SECTION
Scale: 1"=1'-0"

① 4½" deep recess in exposed face. Fill with epoxy mortar after tie rod installation.

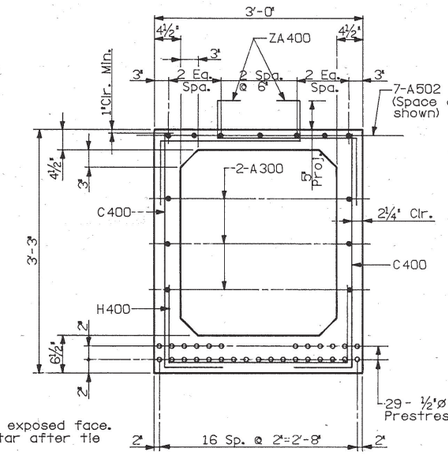

SECTION A-A
Scale: 1"=1'-0"

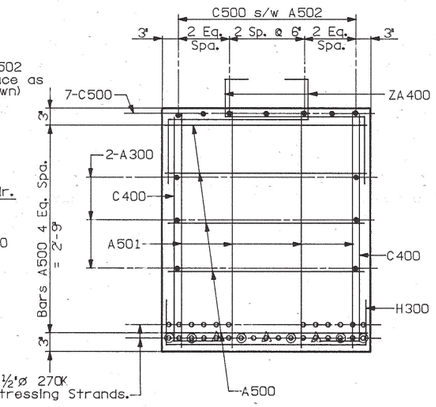

SECTION B-B
Scale: 1"=1'-0"

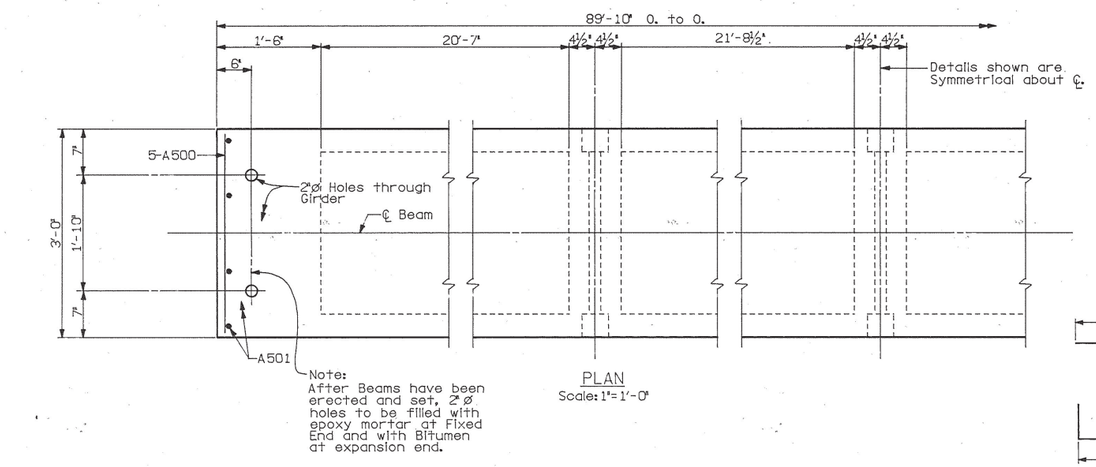

PLAN
Scale: 1"=1'-0"

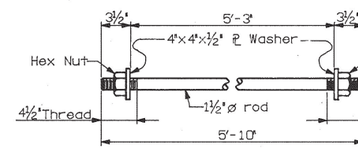

TIE ROD DETAIL

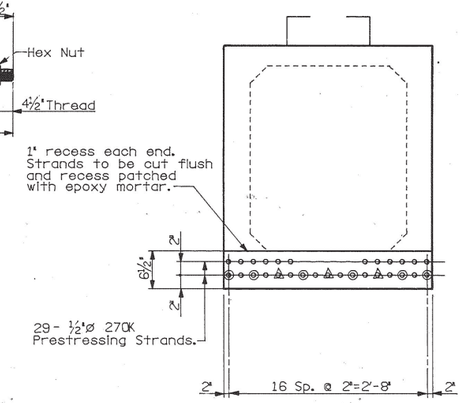

ELEVATION C-C
Scale: 1"=1'-0"

Note:
▲ - Denotes De-bonded Strand 15'-0" from each end.
◉ - Denotes De-bonded Strand 6'-0" from each end.
○ - Denotes Prestressing strand.
● - Denotes Grade 60 Reinf. Steel.

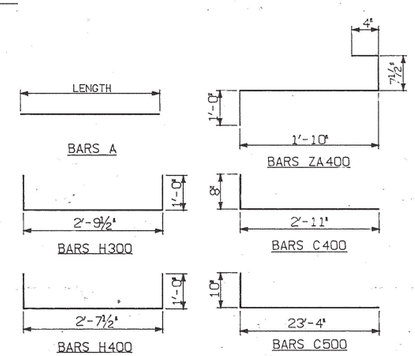

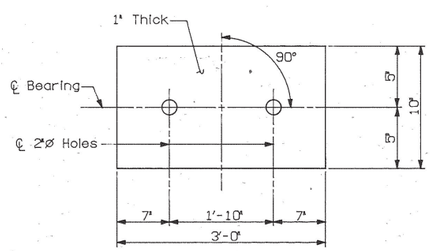

AT PIERS
(8 Req'd)

60 DURO.

DETAILS OF ELASTOMERIC BEARING PADS
No Scale

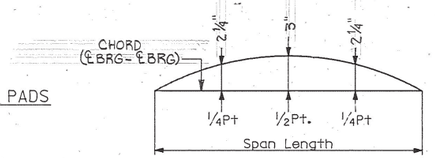

DEAD LOAD CORRECTIONS CURVE
(For Use In Field) △1

BILL OF STEEL - ONE BEAM

		SPAN B		SPAN C			
BARS	SIZE	NO. REQ'D	LENGTH	NO. REQ'D	LENGTH		
A300	3	12	45'-5"	12	45'-5"		
A500	5	10	2'-8"	10	2'-8"		
A501	5	8	2'-11"	8	2'-11"		
A502	5	14	24'-8"	14	24'-8"		
C400	4	156	3'-7"	156	3'-7"		
C500	5	14	24'-2"	14	24'-2"		
H300	3	12	4'-10"	12	4'-10"		
H400	4	78	4'-8"	78	4'-8"		
ZA400	4	156	3'-10"	156	3'-10"		

ESTIMATED QUANTITIES - ONE BEAM

ITEM	UNIT	SPAN B	SPAN C	
CLASS "A" CONCRETE	C.Y.	16.4	16.4	
REINFORCING STEEL	LB.	1,991	1,991	
PRESTRESSING STRANDS	LB.	1,365	1,365	

CONSTR. NO. 80001-3152-44

PROJECT NO.	YEAR	SHEET NO.
IR-40-5(91)257	1989	

REVISIONS

NO.	DATE	BY	BRIEF DESCRIPTION
1	9/25/89	DWT	Dead Load Correction Values Revised

PRESTRESSED BEAM NOTES

The top of all beams are to be rough floated. At approximately the time of initial set, the top of the beams will also be scrubbed transversely with a course wire brush to remove all laitance and produce a rough surface. Where precast slab panels are to be used and set on bituminous fiberboard, the outer two inches of the top flange may be troweled.

Anchorage at the expansion end of beams accomplished by dowels 1"ø x 1'-6". Fixed end dowels to be 1"ø x 1'-6".

Mild steel reinforcing shall be ASTM A615 Grade 60.

All prestressing strands to be 1/2"ø ASTM Grade 270K, 7 wire uncoated Low relaxation prestressing strands.

An initial force at anchorage (after seating) of 31,000 Lbs., shall be applied to each strand in all beams.

1" recess shall be formed at each end of Beam and fill with epoxy mortar as shown. The prestressing strands shall be cut off flush with base of recess.

The concrete for this construction shall be of such properties as to attain a compressive strength of not less than (5,000 PSI) at the age of 28 days and stress transfer shall not be made to the bridge member until the test specimens indicate that the concrete has reached a compressive strength of at least (4,000 PSI). See General Notes for Concrete finishing note.

1"ø weep holes shall be provided at the low point of each cell. Vent holes shall be provided in the top of each cell during fabrication to relieve gas pressures that occur during curing. The vent holes shall be plugged after curing is completed.

NOTE: Cost of elastomeric pads, tie rods, dowels and rubber bonding cement to be included in the cost of prestressed beam.

The sequence for transfer of stress or the cutting strands shall be in accordance with Article 615.14 of the "Standard Specifications for Road and Bridge Construction" and shall be shown on the approved shop drawings. At no time shall more than 1/6th of the total prestressing force be eccentric about the centerline of the beam.

DEAD LOAD CORRECTION CURVE: This curve is for dead load slab and all dead loads that are applied after slab is in place and should be corrected to compensate for the effects due to vertical curve.

STATE OF TENNESSEE
DEPARTMENT OF TRANSPORTATION
BUREAU OF HIGHWAYS

PRESTRESSED BOX BEAM DETAILS
SPANS B & C (E.B.L. & W.B.L.)
I-40 OVER CANEY FORK RIVER
STA. 518+49.00 ℄ SURVEY E.B & W.B. I-40
SMITH COUNTY
1989

DESIGNED BY	HIZ	DATE	11-88
DRAWN BY	EAB	DATE	11-88
SUPERVISED BY	WSH	DATE	11-88
CHECKED BY	HIZ	DATE	1-89

CORRECT _____ ENGINEER OF STRUCTURES
APPROVED _____ DIRECTOR OF HIGHWAYS

M-214-161

Notes: All surfaces of the existing abutment against which new concrete is to be placed shall be cleaned and intentionally roughened. All materials removed becomes the property of the Contractor and shall be disposed of by him.
All costs associated with the demolition and disposal and surface preparation required shall be included in the price bid for item No. 202-04.06

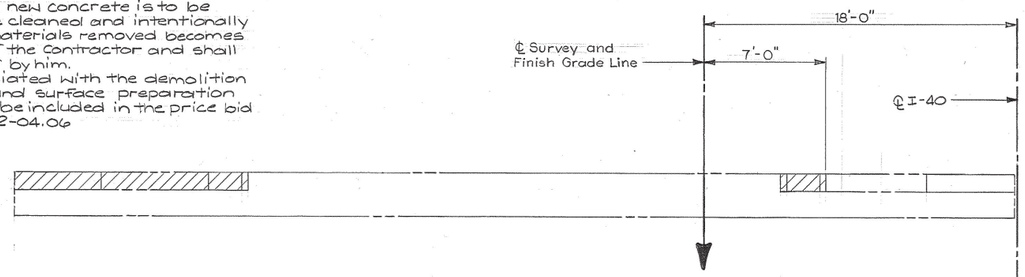

PLAN-EXISTING ABUTMENT 1 EBL
No Scale
(Abutment 1 WBL Symmetrical about ℄ I-40)

DEMOLITION DETAILS

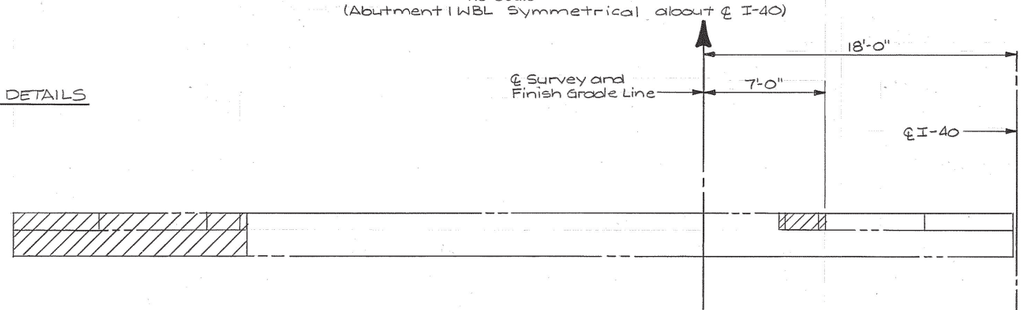

PLAN-EXISTING ABUTMENT 2 WBL
No Scale
(Abutment 2 EBL Symmetrical about ℄ I-40)

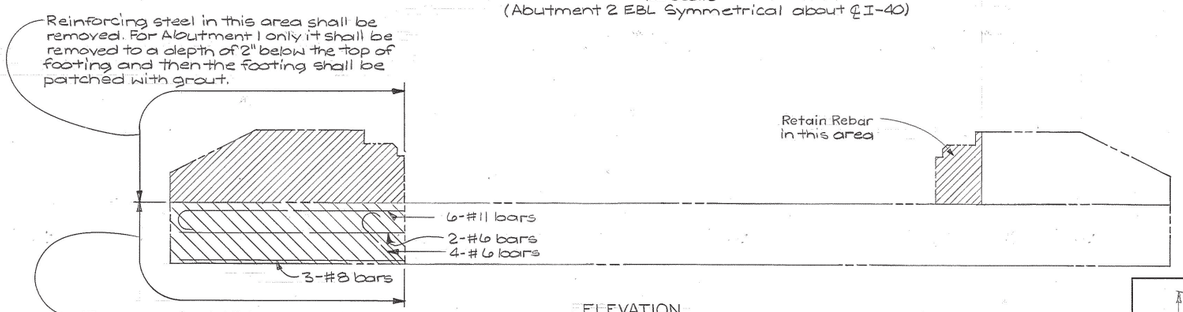

ELEVATION
No Scale
(Abutment 1 E.B.L. looking back on Stationing or Abutment 2 W.B.L. looking in direction of Stationing)

ESTIMATED QUANTITIES ⚠				
ITEM	CONCRETE f'c=4500 psi CY	CONCRETE f'c=3000 psi CY	REINFORCING STEEL LBS	EPOXY COATED REINFORCING STEEL (LBS)
ABUTMENT 1 EBL	14	9	2342	1654
ABUTMENT 2 EBL	11	7	5176	2254
ABUTMENT 1 WBL	14	9	2342	1654
ABUTMENT 2 WBL	11	7	5176	2254

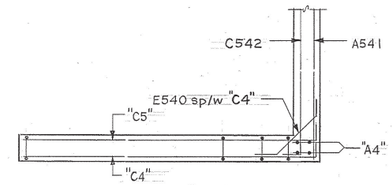

SECTION "A-A"
No Scale

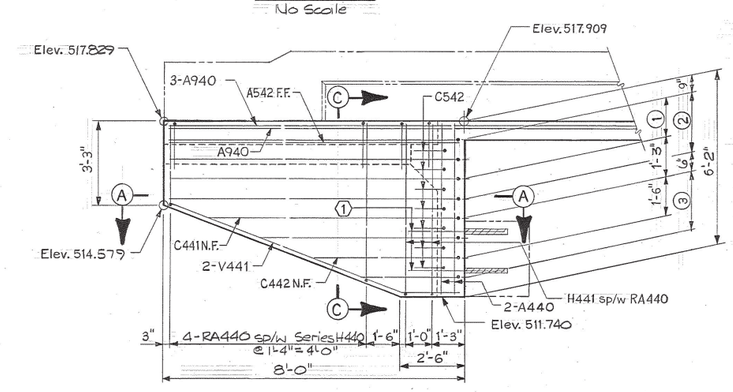

ELEVATION-WINGWALL 1
No Scale

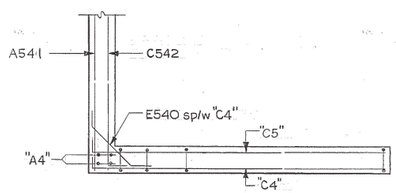

SECTION "B-B"
No Scale

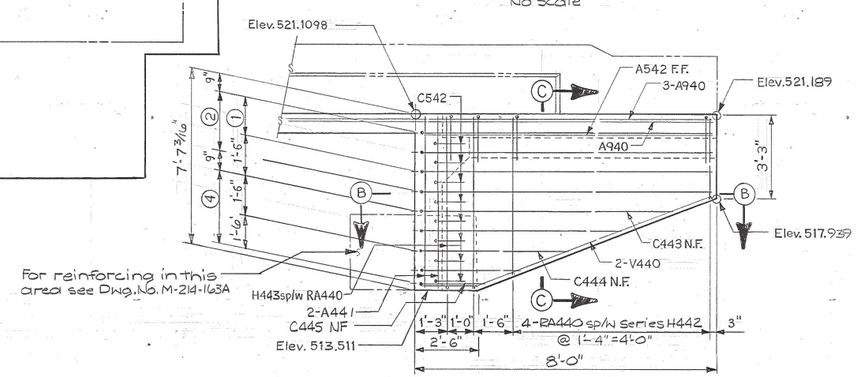

For reinforcing in this area see Dwg. No. M-214-163A

ELEVATION-WINGWALL 2
No Scale

CONSTR. NO. 80001-3152-44

PROJECT NO.	YEAR	SHEET NO.
IR-40-5(91)257	1989	

REVISIONS

NO.	DATE	BY	BRIEF DESCRIPTION
1	9/25/89	DWT	Quantities Revised

⑤ At Wingwall 1 (EBL & WBL) reduce 1'-9" dimension to 1'-0" in vicinity of bridge end drain only. Form at constant 1'-0" for full height at these locations. Omit Bars "RA4" and field cut Bars "A9" and A545 at drains. Adjust placement of remaining reinforcing to fit while maintaining clearances. See Std. Dwg D-BE-3 for limits of bridge end drain.

① - Do not field bend doweled "A5" bars at Wing location

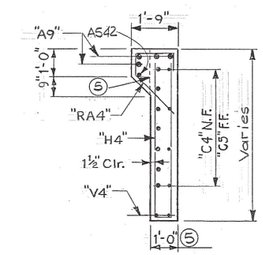

SECTION "C-C"
No Scale

① - 2-C440 @ 18" N.F.
② - 4-C544 @ 9" = 2'-3" F.F.
③ - Series C541 @ 9" = 2'-3" F.F.
④ - Series C543 @ 9" = 3'-0" F.F.

N.F. - Near Face
F.F. - Far Face

STATE OF TENNESSEE
DEPARTMENT OF TRANSPORTATION
BUREAU OF HIGHWAYS

ABUTMENT DETAILS (1)
I-40 OVER CANEY FORK RIVER
STA. 518+49 ℄ SURVEY E.B. & W.B. I-40
SMITH COUNTY
1989

DESIGNED BY DWT DATE 1-89
DRAWN BY SFC DATE 1-89
SUPERVISED BY WSH DATE 1-89
CHECKED BY DWT DATE 2-89

CORRECT _____ ENGINEER OF STRUCTURES
APPROVED _____ DIRECTOR OF HIGHWAYS

M-214-162

CONSTR. NO. 80001-3152-44

PROJECT NO.	YEAR	SHEET NO.
IR-40-5(91)257	1989	

REVISIONS

NO.	DATE	BY	BRIEF DESCRIPTION
1	9/23/89	DWT	Revised for Constr. Jt.

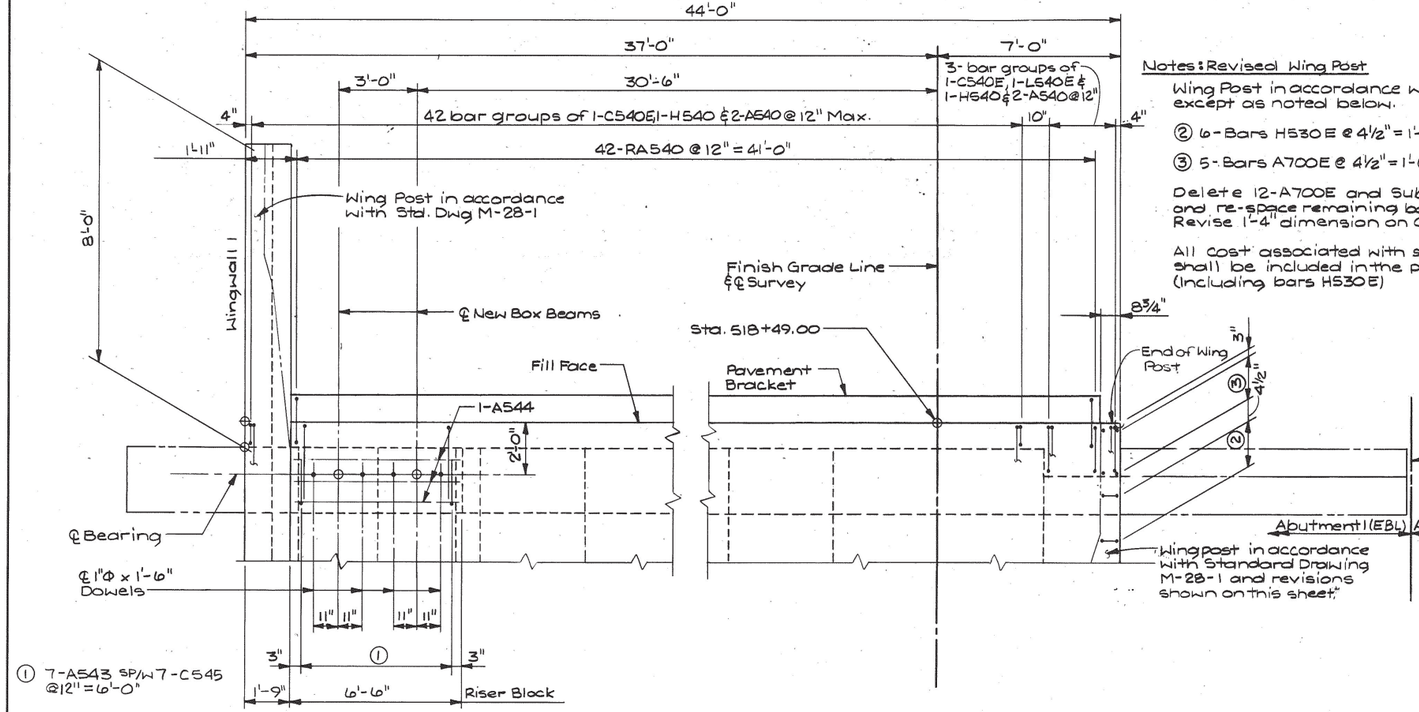

PLAN-ABUTMENT 1 EBL
No Scale
(Abutment 1 (WBL) symmetrical about ℄ I-40)

Notes: Revised Wing Post

Wing Post in accordance with Std. Dwg M-28-1 except as noted below.

② 6-Bars H530E @ 4½" = 1'-10½"

③ 5-Bars A700E @ 4½" = 1'-6" EF

Delete 12-A700E and Substitute 6-H530E, and re-space remaining bars as shown. Revise 1'-4" dimension on GA500E to 1'-0½"

All cost associated with shown revision to M-28-1 shall be included in the price bid for item #620-03 (Including bars H530E)

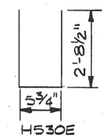

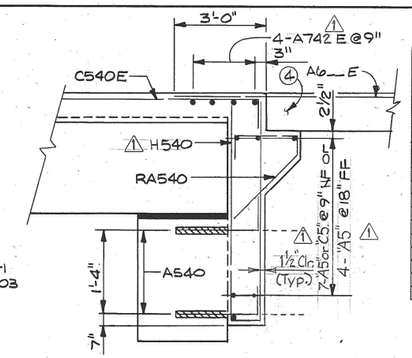

SECTION B-B
No Scale

Note: This section shall not be poured until the beams are in place. Also, this section shall be poured concurrently with the end of the slab.

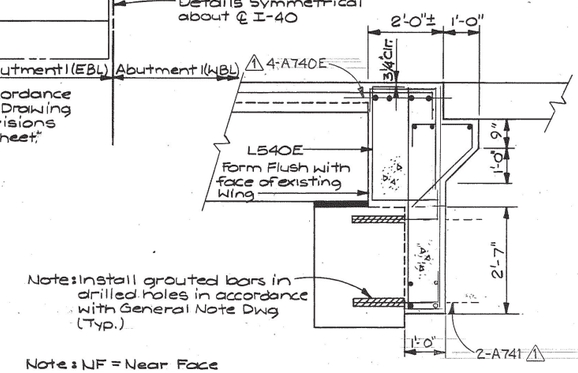

Note: Install grouted bars in drilled holes in accordance with General Note Dwg (Typ.)

SECTION A-A
No Scale

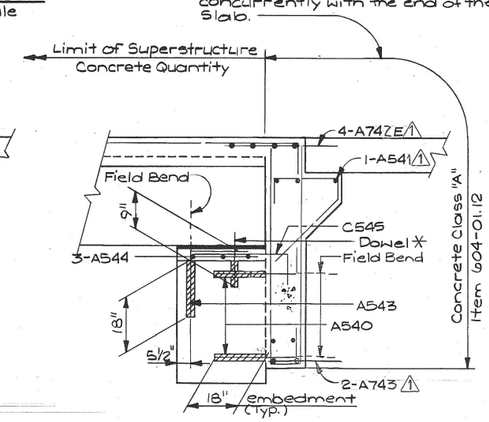

SECTION C-C
No Scale

Note: NF = Near Face
FF = Far Face
EF = Each Face

④ Approach pavement in accordance with Std. Drawing K-86-144 except delete Bars F9__ and A6__ shown on K-86-144 and substitute Bars A6__E (6'-0" long) as shown @ 12" spacing. (41 req'd per approach slab) All costs associated with revision shown shall be included in the price bid for Item No. 604-03.04

* Drill and grout into existing abutment as necessary to satisfy embedment requirements.

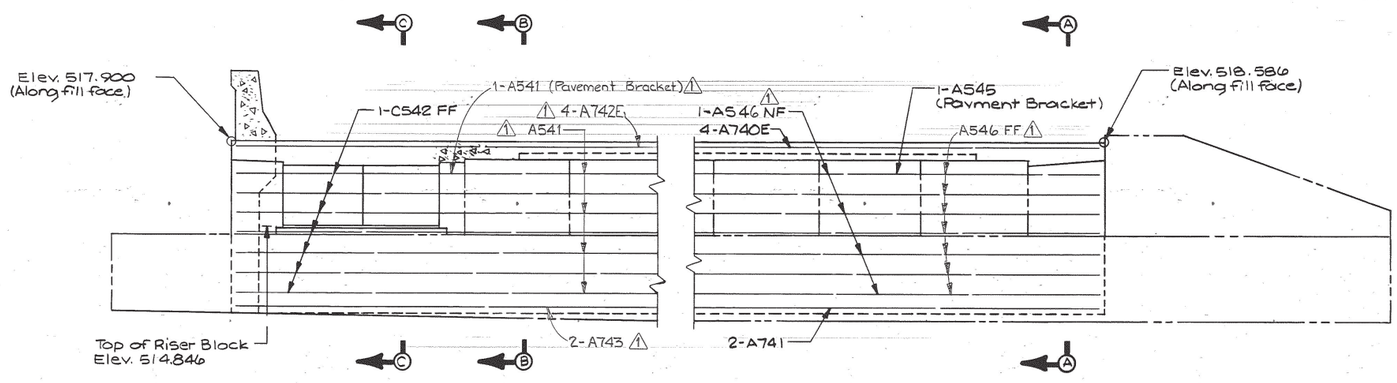

ELEVATION
No Scale
(Looking back on Stationing)

Note: When pouring riser block provisions shall be made for setting dowels. All costs associated with furnishing and installing dowels shall be included in the price bid for prestressed beams. Cost of bridge rail and post is to be included in the cost of bridge rail system. All costs associated with field bending reinforcing steel shall be included in the price bid for Item No. 604-03.02

STATE OF TENNESSEE
DEPARTMENT OF TRANSPORTATION
BUREAU OF HIGHWAYS

ABUTMENT DETAILS (2)
I-40 OVER CANEY FORK RIVER
STA. 518+49 ℄ SURVEY EBL & WBL I-40
SMITH COUNTY
1989

DESIGNED BY	DWT	DATE	1-89
DRAWN BY	TEE	DATE	1-89
SUPERVISED BY	WSD	DATE	1-89
CHECKED BY	DWT	DATE	2-89

CORRECT _____ ENGINEER OF STRUCTURES

APPROVED _____ DIRECTOR OF HIGHWAYS

M-214-163

CONSTR. NO. 80001-3152-44

PROJECT NO.	YEAR	SHEET NO.
IR-40-5(91)257	1989	

REVISIONS

NO.	DATE	BY	BRIEF DESCRIPTION
1	2/7/89	DWT	Rebar designation corrected
2	3/29/89	DWT	Revised for Constr. Jt.

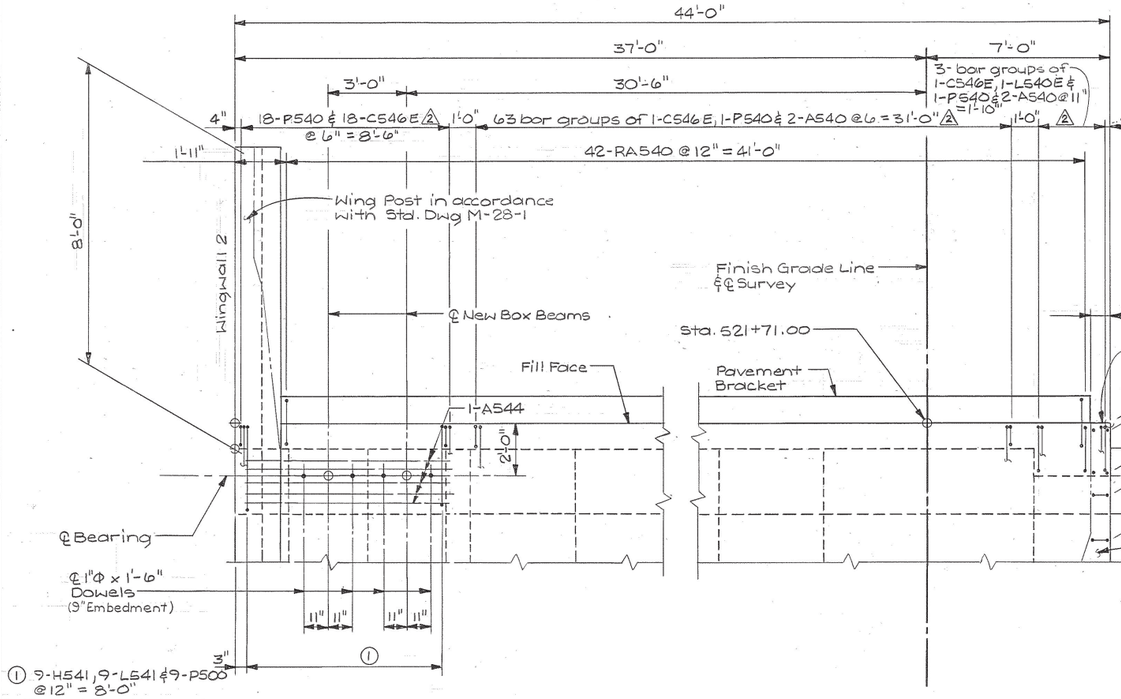

PLAN-ABUTMENT ℄WBL
No Scale
(Abutment 2(EBL) symmetrical about ℄ I-40)

Notes: Revised Wing Post

Wing Post in accordance with Std. Dwg M-28-1 except as noted below.

② 6-Bars H530E @ 4½" = 1'-10½"

③ 5-Bars A700E @ 4½" = 1'-6" EF

Delete 12-A700E and Substitute 6-H530E, and re-space remaining bars as shown. Revise 1'-4" dimension on GA500E to 1'-0½"

All cost associated with shown revision to M-28-1 shall be included in the price bid for item #620-03 (including bars H530E)

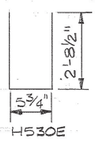

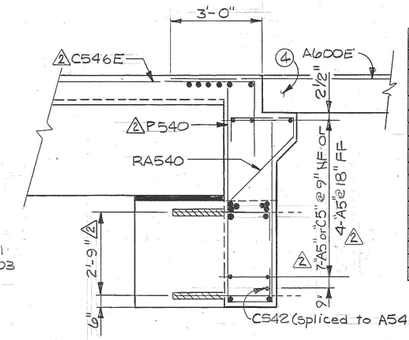

SECTION B-B
No Scale

Note: This section shall not be poured until the beams are in place. Also, this section shall be poured concurrently with the end of the slab.

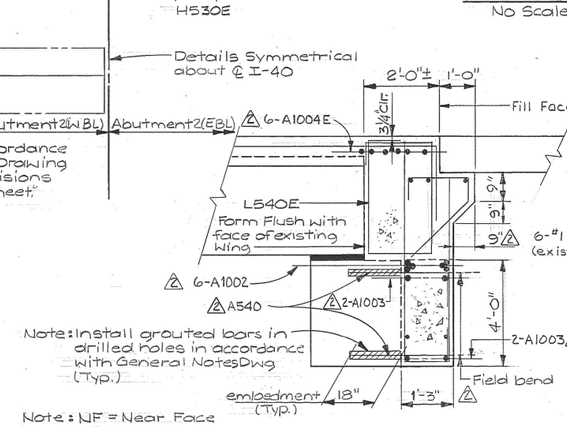

Note: NF = Near Face
FF = Far Face
EF = Each Face

SECTION A-A
No Scale

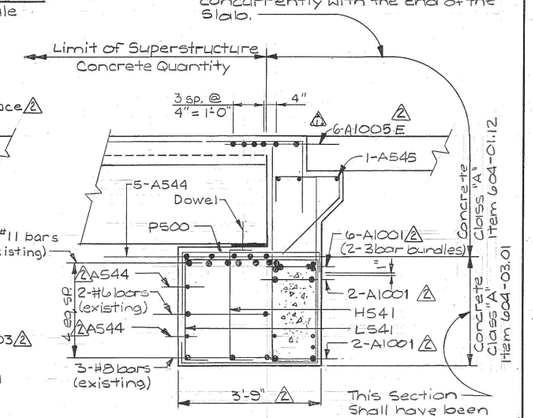

This Section shall have been poured and obtained full strength before any beam is set in place.

SECTION C-C
No Scale

④ Approach pavement in accordance with Std. Drawing K-86-144 except delete Bars F9__ and A6__ shown on K-86-144 and substitute Bars A6__E (6'-0" long) as shown @ 12" spacing. (41 req'd per approach slab) All costs associated with revision shown shall be included in the price bid for Item No. 604-03.04

Note:
For additional notes see Dwg. No. M-214-163.

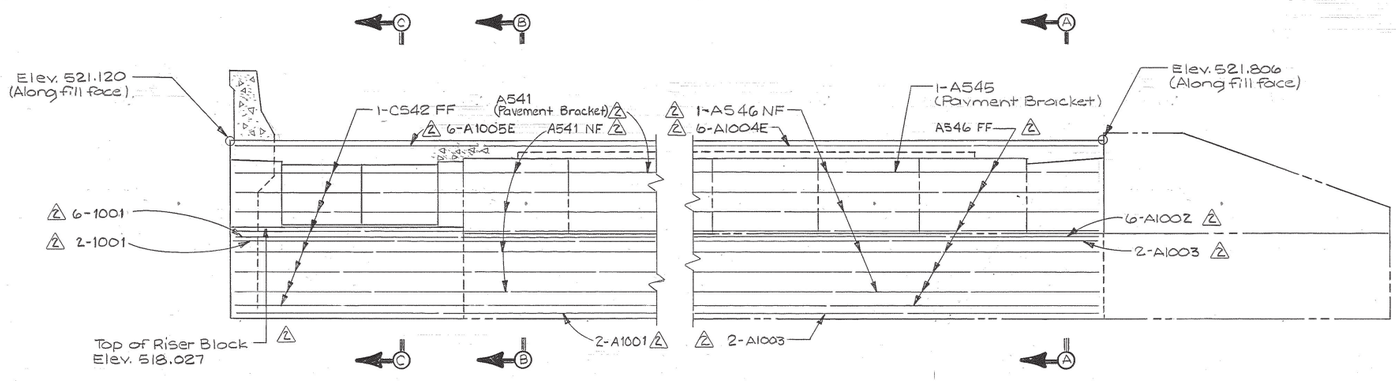

ELEVATION
No Scale
(Looking in direction of stationing)

STATE OF TENNESSEE
DEPARTMENT OF TRANSPORTATION
BUREAU OF HIGHWAYS

ABUTMENT DETAILS (3)
I-40 OVER CANEY FORK RIVER
STA. 518+49 ℄ SURVEY EBL & WBL I-40
SMITH COUNTY
1989

DESIGNED BY	DWT	DATE	1-89
DRAWN BY	TEE	DATE	1-89
SUPERVISED BY	WSH	DATE	1-89
CHECKED BY	DWT	DATE	2-89

CORRECT _____ ENGINEER OF STRUCTURES

APPROVED _____ DIRECTOR OF HIGHWAYS

M-214-163A

U.S.A. No. DTNOXX7068

Note:
See Detail 'G' for dowel layout.

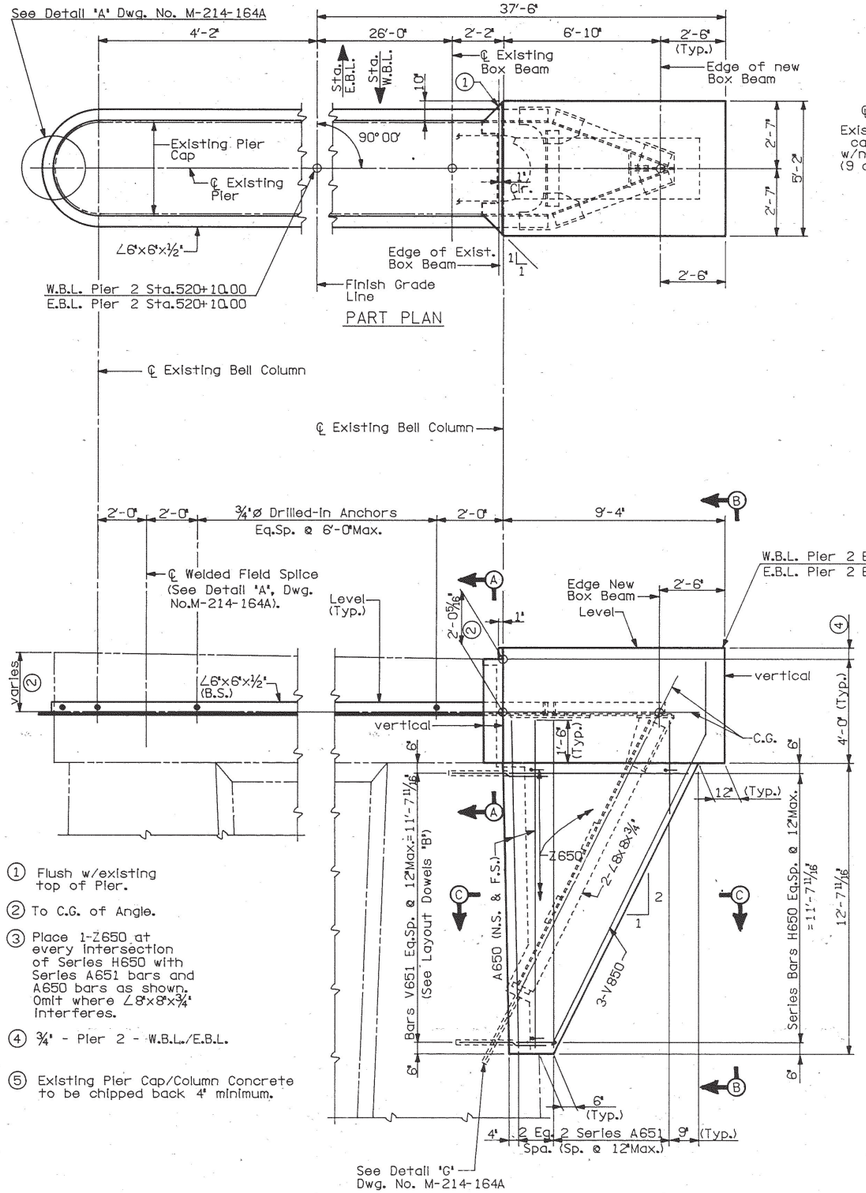

PART PLAN

PART ELEVATION
(Showing Cantilever Column Reinforcing)

① Flush w/existing top of Pier.

② To C.G. of Angle.

③ Place 1-Z650 at every intersection of Series H650 with Series A651 bars and A650 bars as shown. Omit where ∠8"x8"x¾" interferes.

④ ¾" - Pier 2 - W.B.L./E.B.L.

⑤ Existing Pier Cap/Column Concrete to be chipped back 4" minimum.

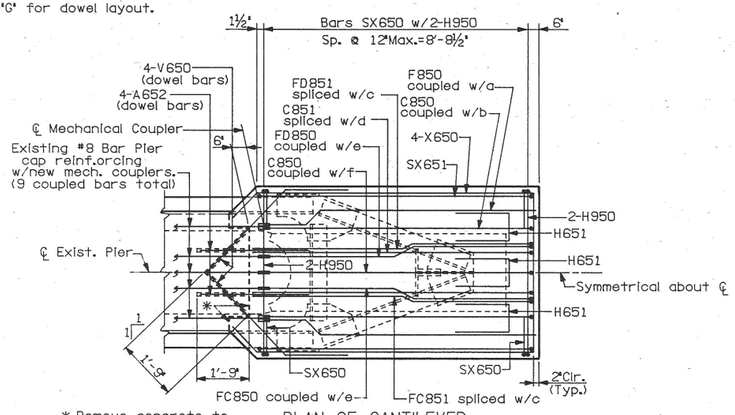

* Remove concrete to this line.

PLAN OF CANTILEVER CAP REINFORCING

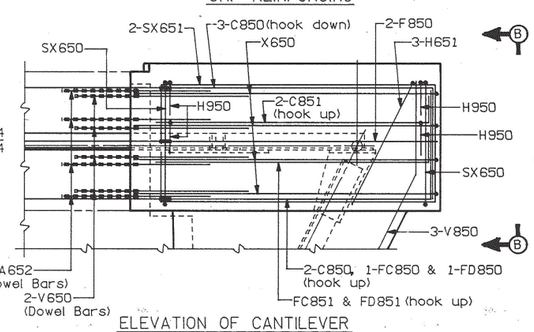

ELEVATION OF CANTILEVER CAP REINFORCING

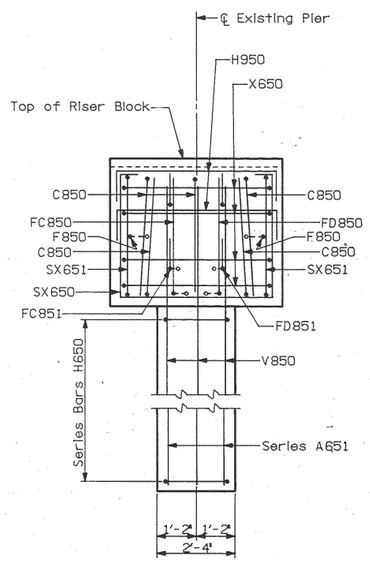

ELEVATION B-B

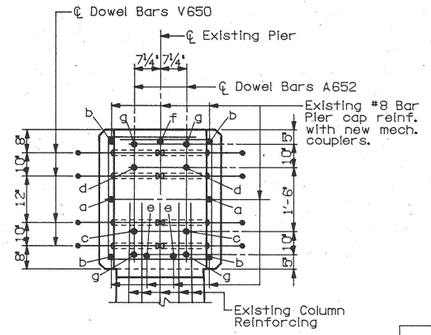

SECTION A-A

g - Denotes A652 dowel bars only.

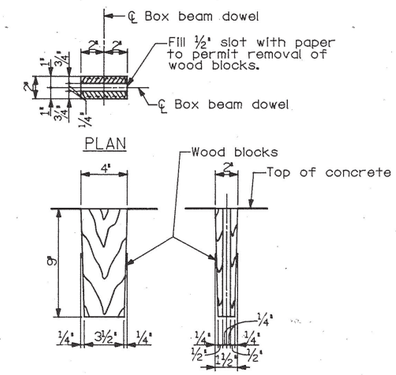

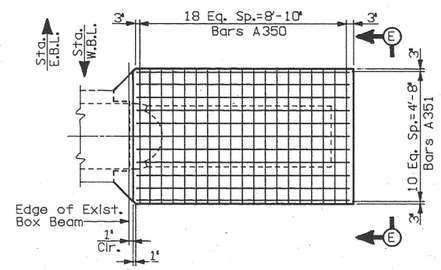

PLAN OF RISER BLOCK
PIER 2 W.B.L. & E.B.L.

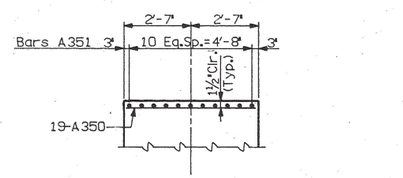

ELEVATION E-E

CONSTR. NO. 80001-3152-44

PROJECT NO.	YEAR	SHEET NO.
IR-40-5(91)257	1989	

REVISIONS

NO.	DATE	BY	BRIEF DESCRIPTION

Note:
For notes, see Dwg. No. M-214-164A.

ESTIMATED QUANTITIES

Item / Pier No.	Class 'A' Concrete (Bridges) C.Y.	Structural Steel Lb.	Steel Bar Reinforcement (Bridges) Lb.
W.B.L. - 2	13	3,600	2583
E.B.L. - 2	13	3,600	2583

Ⓐ Dowels 1"ø x 1'-6" embedded 9" in cap.

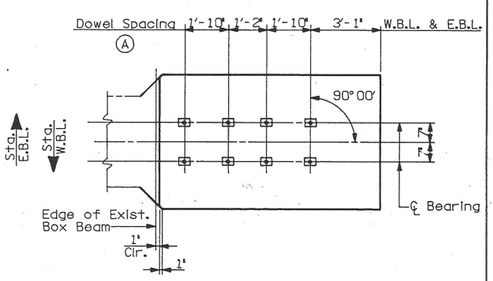

DETAIL 'G' DOWEL LAYOUT

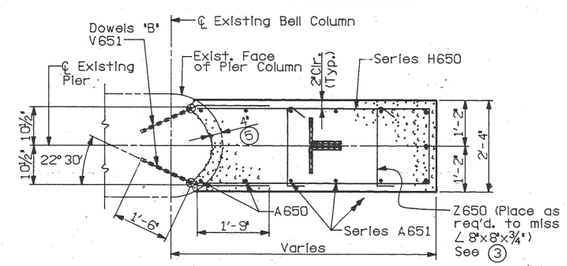

SECTION C-C
(Layout Dowels 'B')

STATE OF TENNESSEE
DEPARTMENT OF TRANSPORTATION
BUREAU OF HIGHWAYS

PIER 2
I-40 W.B.L. & E.B.L. OVER CANEY FORK RIVER
STA. 518+49.00 ℄ SURVEY E.B. & W.B. I-40
SMITH COUNTY
1989

DESIGNED BY	WGA	DATE	2-89
DRAWN BY	EAB	DATE	2-89
SUPERVISED BY	WSH	DATE	2-89
CHECKED BY	WGA	DATE	3-89

CORRECT _____ ENGINEER OF STRUCTURES

APPROVED _____ DIRECTOR OF HIGHWAYS

Scale: None

M-214-164

U.S.A. No. DTNOXX706E

ZFHE58,240DTNOXX706-D0161
DTNOXX
11-MAR-1989 15:39

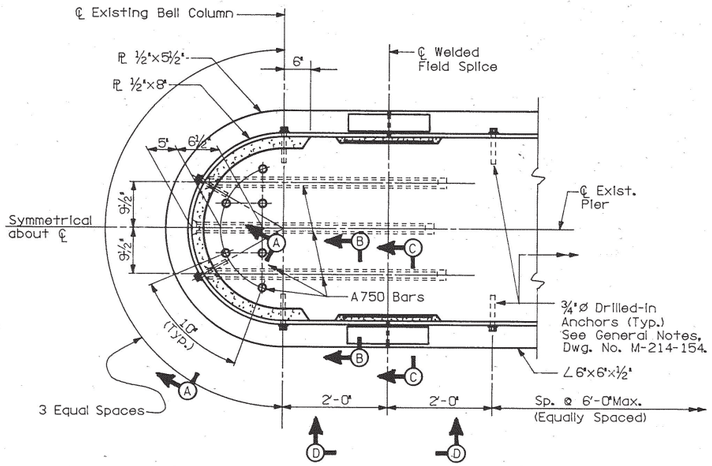

DETAIL "A"

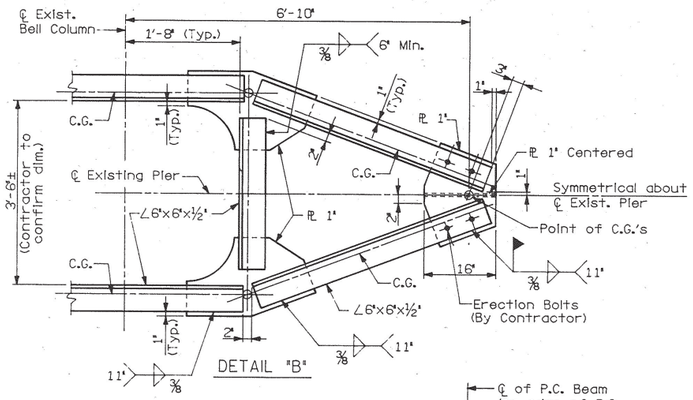

DETAIL "B"

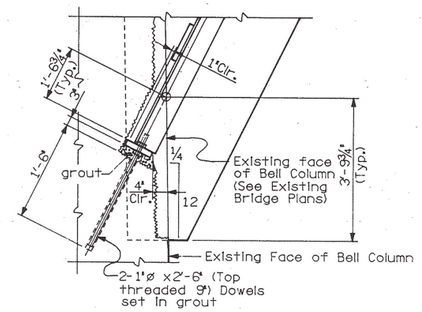

DETAIL "G"

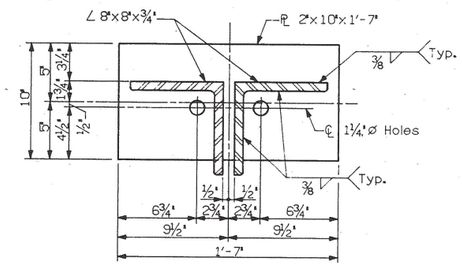

DETAIL "E"
PLAN OF BEARING PLATE

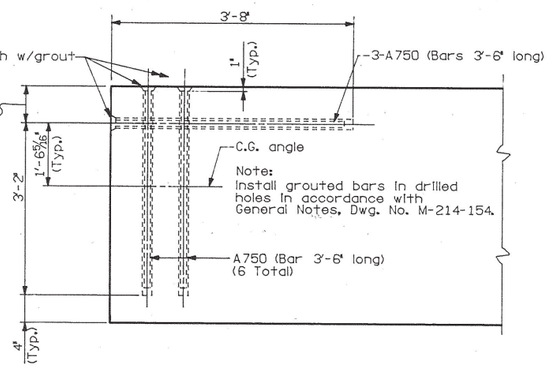

DETAIL "H"

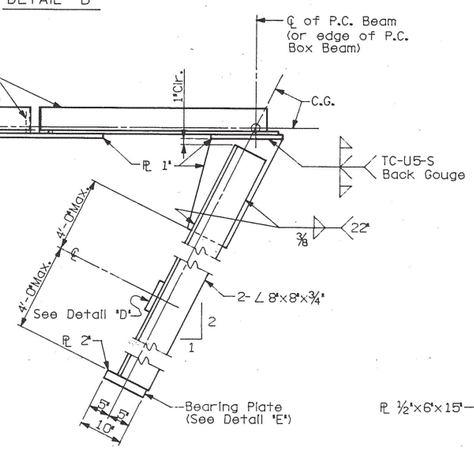

DETAIL "C"

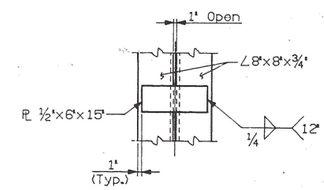

DETAIL "D"

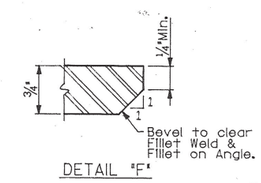

DETAIL "F"

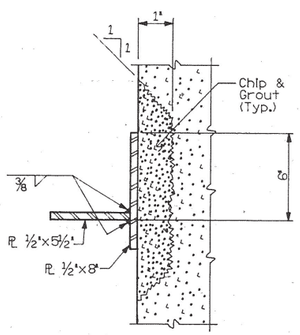

SECTION A-A

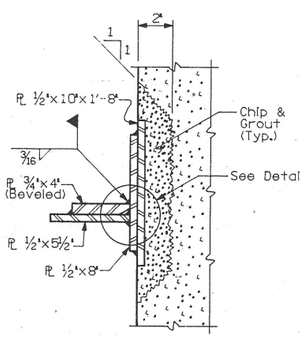

SECTION B-B

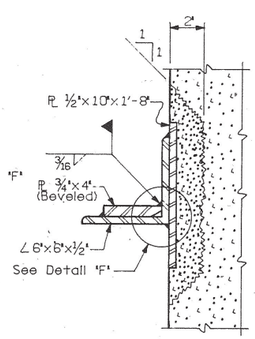

SECTION C-C

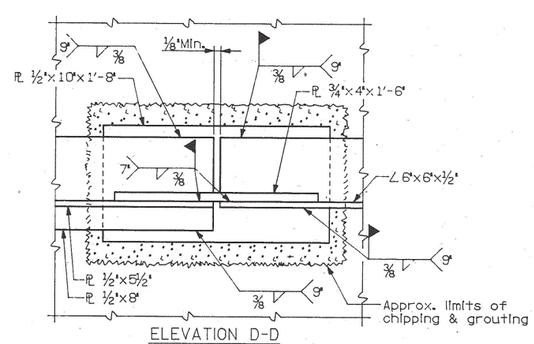

ELEVATION D-D

Notes Con't:

Drilled-in anchors shall be in accordance with General Notes.

Riser blocks to be poured monolithically with Cantilever cap beam.

Elastomeric pads shall be in place a minimum of one day before being disturbed by setting beams. Place rubber bonding cement in such a way that column surfaces will not be stained.

Riser block bearing pad surface to conform to bottom of beam grade.

Anchor bolts shall be in place when Cantilever cap is poured.

Reinforcement shall be adjusted as needed to prevent interference with anchor bolt placement. Drilled and grouted anchor bolts shall not be allowed.

CONSTR. NO. 80001-3152-44

PROJECT NO.	YEAR	SHEET NO.
IR-40-5(91)257	1989	

REVISIONS

NO.	DATE	BY	BRIEF DESCRIPTION

Notes:

For General Notes, see Dwg No. M-214-154.

Dimensions shown on this drawing are necessarily approximate. Contractor shall field verify dimensions of existing structure before proceeding with work, which includes but is not limited to the fabrication of structural steel, reinforcement, girders and formwork.

All welds and weld inspections to be in accordance with ANSI/AASHTO/AWS D1.5-88 and Special Provision No. 602. All welds, including fillet welds, to be inspected. All structural steel shall be considered main members for the purpose of determining frequency of inspection of fillet welds.

All structural steel not completely encased in concrete shall conform to AASHTO M 222 (ASTM A588), FY=50 ksi minimum. All structural steel completely encased in concrete shall conform to AASHTO M 183 (ASTM A36), FY=36 ksi.

All structural steel exposed to the atmosphere shall be finished with paint in accordance with General Notes for painting structural steel. In addition, surfaces not accessible after erection shall recieve an additional shop primer coat of inorganic zinc paint.

Chipping portions of existing pier necessary for bracket addition and drilling and grouting of dowels shall be considered incidental to the work and shall not be paid for separately.

The 4 inch chipping of concrete may not be sufficient to insure the removal of all unsound concrete. If more concrete removal is required to reach sound material, care shall be taken not to cut or otherwise damage existing reinforcement.

Concrete shall obtain 90 per cent of the specified 28 day strength prior to placement of the girders.

Grout shall be non-shrink, F'c=5,000 psi. Grout shall be allowed to achieve a strength of 3,000 psi before being loaded.

Care shall be taken during placement of concrete to insure that concrete completely fills space under structural steel gusset plates and that no pockets or voids exist adjacent to gusset plates.

Mechanical couplers shall be Cold Forged Mechanical Splices applied by octagonal dies and be capable of developing 125% of the specified yield strength of the reinforcement, in accordance with Provisions of AASHTO Art.8.32. Certification of AASHTO compliance will be required prior to approval. All costs associated with installing mechanical couplers, labor, equipment and incidentals shall be included in the cost for Item 604-03.02.

STATE OF TENNESSEE
DEPARTMENT OF TRANSPORTATION
BUREAU OF HIGHWAYS

PIERS 1, 2 & 3
I-40 W.B.L. & E.B.L. OVER CANEY FORK RIVER
STA. 518+49.00 ℄ SURVEY E.B. & W.B. I-40
SMITH COUNTY
1989

DESIGNED BY	WGA	DATE	2-89
DRAWN BY	EAB	DATE	2-89
SUPERVISED BY	WSH	DATE	2-89
CHECKED BY	WGA	DATE	3-89

CORRECT _____ ENGINEER OF STRUCTURES

APPROVED _____ DIRECTOR OF HIGHWAYS

Scale: None

M-214-164A

U.S.A. No. DTNOXX706A

Note:
See Detail 'G' for dowel layout, Dwg. No. M-214-164. (Refer to Box Beam Detail Dwg. for location of dowels).

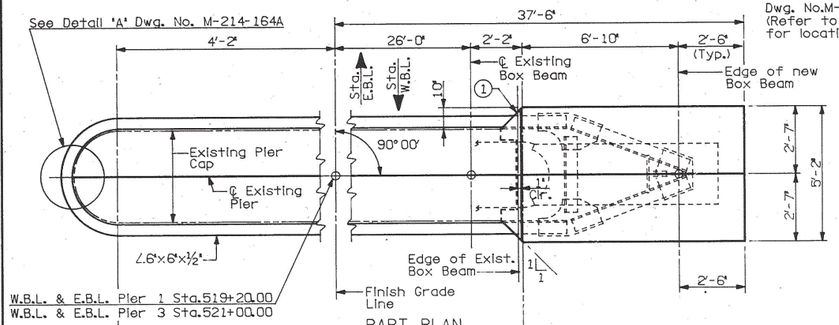

PART PLAN

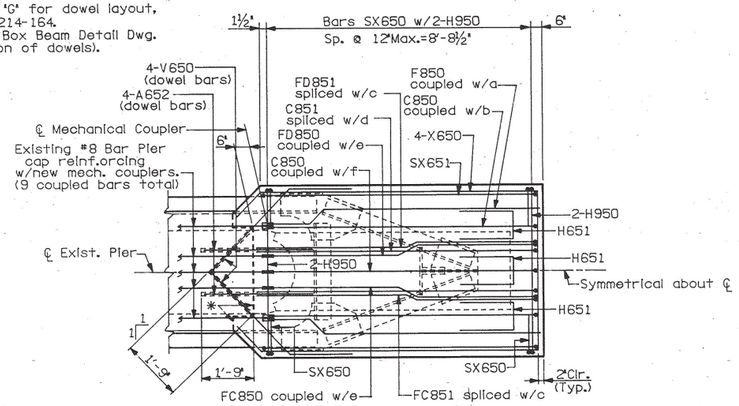

* Remove concrete to this line.

PLAN OF CANTILEVER CAP REINFORCING

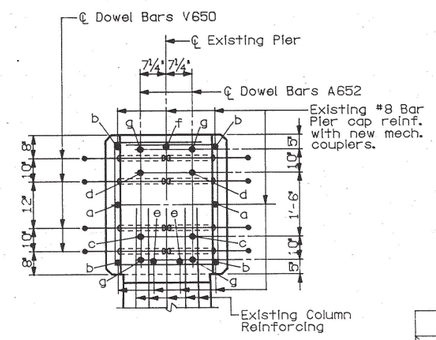

SECTION A-A

g - Denotes A652 dowel bars only.

CONSTR. NO. 80001-3152-44

PROJECT NO.	YEAR	SHEET NO.
IR-40-5(91)257	1989	

REVISIONS

NO.	DATE	BY	BRIEF DESCRIPTION

Note:
For notes, see Dwg. No. M-214-164A.

ESTIMATED QUANTITIES

Item / Pier No.	Class 'A' Concrete (Bridges) C.Y.	Structural Steel Lb.	Steel Bar Reinforcement (Bridges) Lb.
W.B.L. - 1	14	3,600	2660
W.B.L. - 3	14	3,600	2660
E.B.L. - 1	14	3,600	2660
E.B.L. - 3	14	3,600	2660

℄ Existing Bell Column

℄ Existing Bell Column

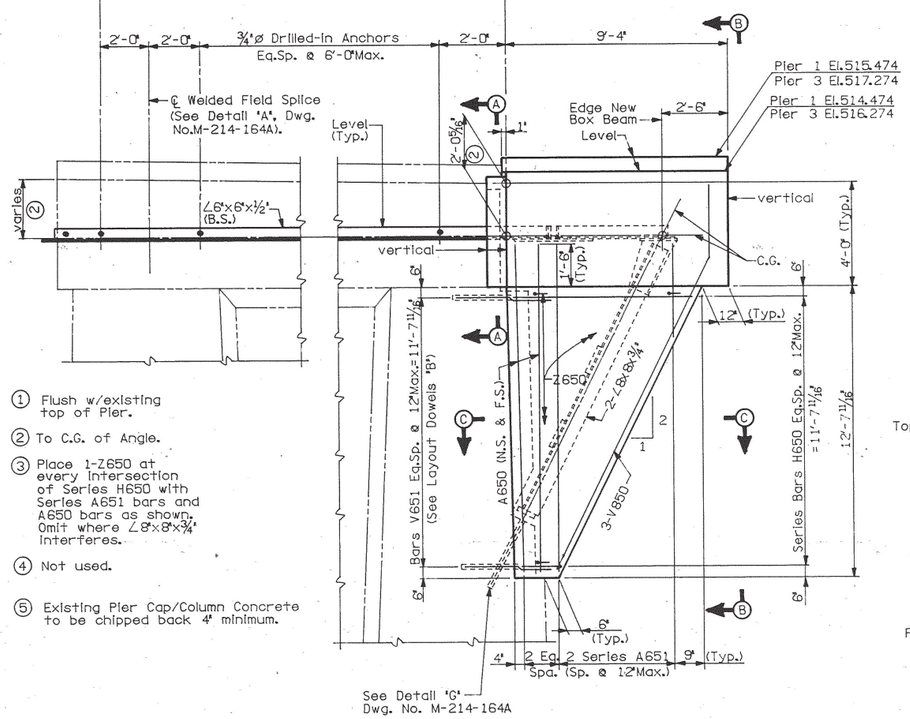

① Flush w/existing top of Pier.

② To C.G. of Angle.

③ Place 1-Z650 at every intersection of Series H650 with Series A651 bars and A650 bars as shown. Omit where ∠8"x8"x¾" interferes.

④ Not used.

⑤ Existing Pier Cap/Column Concrete to be chipped back 4" minimum.

PART ELEVATION
(Showing Cantilever Column Reinforcing)

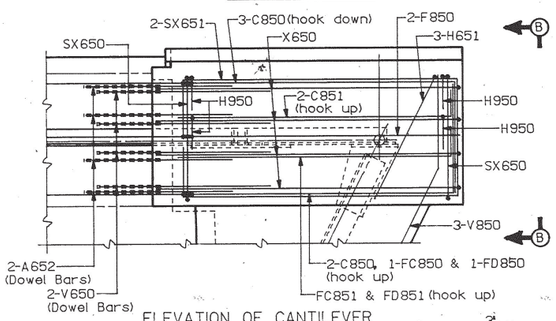

ELEVATION OF CANTILEVER CAP REINFORCING

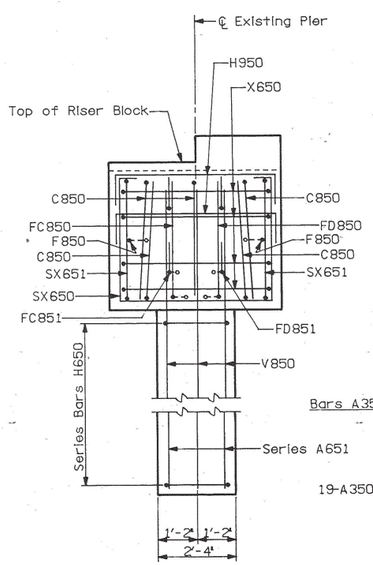

ELEVATION B-B

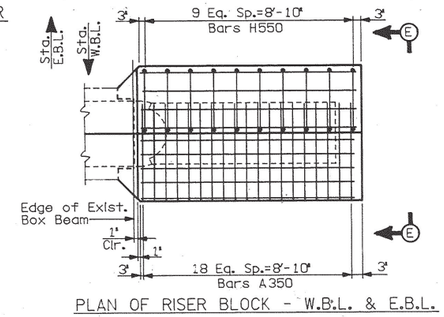

PLAN OF RISER BLOCK - W.B.L. & E.B.L.

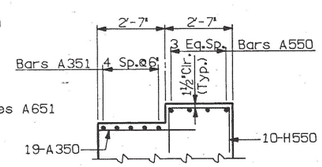

ELEVATION E-E

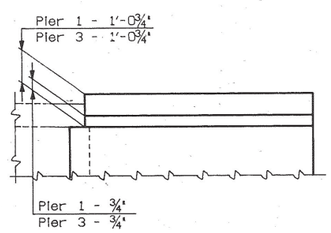

ELEVATION OF RISER BLOCK

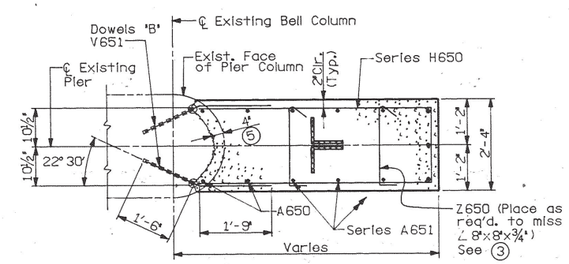

SECTION C-C
(Layout Dowels 'B')

STATE OF TENNESSEE
DEPARTMENT OF TRANSPORTATION
BUREAU OF HIGHWAYS

PIERS 1 & 3
I-40 W.B.L. & E.B.L. OVER CANEY FORK RIVER
STA. 518+49.00 ℄ SURVEY E.B. & W.B. I-40
SMITH COUNTY
1989

DESIGNED BY	WGA	DATE	2-89
DRAWN BY	EAB	DATE	2-89
SUPERVISED BY	WSH	DATE	2-89
CHECKED BY	WGA	DATE	3-89

CORRECT _____ ENGINEER OF STRUCTURES

APPROVED _____ DIRECTOR OF HIGHWAYS

Scale: None

M-214-164B

U.S.A. No. DTNOXX704A

ZF1450.24 DTNOXX704A.DGN 13-JAN-1989 11:54 DTNOXX

SPAN A THRU D - W.B.L.

MARK	T	LOCATION	SZ	NO. RQ'D	a	b	c	d	e	LENGTH FT-IN	WEIGHT LBS
A500	E	DECK	5	473	4- 9					4- 9	2343
A501	E	"	5	473	10- 9					10- 9	5303
⚠ A502	E	"	5	106	8-10					8-10	977
A503	E	"	5	583	30- 0					30- 0	18242
A504	E	"	5	102	30- 6					30- 6	3245
A505	E	"	5	51	35- 6					35- 6	1888
⚠ B500	E	"	5	482	10- 0	0- 7				10- 7	5321
⚠ B501	E	"	5	243	25- 9	0- 7				26- 4	6674
⚠ B502	E	"	5	243	19-10	0- 7				20- 5	5175

***TOTAL WEIGHT (LBS) ⚠ 49168

⚠ ***TOTAL INCLUDES 49168 LBS OF EPOXY COATED BARS

ABUTMENT 1 W.B.L.

MARK	T	LOCATION	SZ	NO. RQ'D	a	b	c	d	e	LENGTH FT-IN	WEIGHT LBS
A440		WINGWALL 1	4	4	5- 9					5- 9	15
A540		ABUTMENT	5	90	3- 8					3- 8	344
⚠ A541		ABUTMENT	5	5	24-4					24-4	127
A542		WINGWALL 1	5	1	7- 8					7- 8	8
A543		ABUTMENT	5	7	3- 6					3- 6	26
A544		"	5	3	6- 2					6- 2	19
⚠ A545		ABUTMENT	5	1	18-7					18-7	19
⚠ A740	E	"	7	4	19-4					19-4	158
⚠ A741		"	7	2	19-4					19-4	80
A940		WINGWALL 1	9	4	14- 6					14- 6	197
C440		"	4	2	7- 8	0- 8				8- 4	11
C441		"	4	1	7- 0	0- 8				7- 8	5
C442		"	4	1	4- 2	0- 8				4-10	3
C540	E	ABUTMENT	5	45	10- 0	0-10				10-10	508
C541		WINGWALL	5	1	7- 0	0-10				7-10	24
		@ 4 BAR SERIES		EACH	TO					TO	
					2- 9					3- 7	
⚠ C542		ABUTMENT	5	7	24-4	0-10				25-2	184
C544		WINGWALL 1	5	4	7- 8	0-10				8- 6	35
C545		ABUTMENT	5	7	3- 2	0-10				4- 0	29
E540		WINGWALL 1	5	4	2- 1½	0-10	0- 7⅛	0- 7⅛		3-10	16
H440		"	4	1	0- 9	3- 0				6- 9	24
		@ 4 BAR SERIES		EACH		TO				TO	
						5- 1				10-11	
H441		"	4	2	0- 9	5- 8				12- 1	16
H540		ABUTMENT	5	45	0- 9	5- 8				12- 1	567
L540	E	"	5	3	1- 9	3- 2	0- 6			10-10	34
RA440		WINGWALL 1	4	6	0- 8	1- 6	0- 9½	2- 1½	1- 6	5- 1	20
RA540		ABUTMENT	5	42	0-10	1- 9	0- 6	2- 5	1- 8½	5- 6	241
V441		WINGWALL 1	4	2	2- 4	6- 0	5- 4	2- 9		8- 4	11

⚠ FOR CONTINUATION SEE DRAWING NO. M-214-166A

***TOTAL WEIGHT (LBS) 3241

***TOTAL INCLUDES 899 LBS OF EPOXY COATED BARS

***TOTAL INCLUDES 2342 LBS OF NON EPOXY COATED BARS

PIER 1 - W.B.L.

MARK	T	LOCATION	SZ	NO. RQ'D	a	b	c	d	e	LENGTH FT-IN	WEIGHT LBS
A350		RISER BLOCK	3	19	3- 5					3- 5	24
A351		"	3	5	9- 1					9- 1	17
A550		"	5	4	9- 1					9- 1	38
A650		CANT.COLUMN	6	4	13-11¾					14- 0	84
A651		"	6	2	13-11¾					14- 0	175
		@ 7 BAR SERIES		EACH	TO					TO	
					2- 7½					2- 8	
A652		CANT.CAP	6	8	3- 6					3- 6	42
C850		"	8	5	8-11	3- 5½				12- 5	166
C851		"	8	2	9- 2½	1- 0				10- 3	55
F850		"	8	2	1- 4¼	0- 9	7- 0	0- 6¼	0- 6¼	9- 1	49
FC850		"	8	1	4- 5½	0-10⅜	3- 8	0- 9	3- 5½	12- 5	33
FC851		"	8	1	5- 1	0- 2	1- 0	0- 1¾	1- 0	9-11	26
FD850		"	8	1	4- 5¾	0-10⅜	3- 8	0- 9	3- 5½	12- 6	33
FD851		"	8	1	5- 1	0- 2	3- 8	0- 1¾	1- 0	9-11	26
H650		RISER BLOCK	5	10	2- 4	2- 2				6- 8	70
H650		CANT.COLUMN	6	1	2- 0	7- 4				16- 8	207
		@ 13 BAR SERIES		EACH		TO				TO	
						1- 3				4- 6	
H651		CANT.CAP	6	3	1- 0	4- 0				9- 0	41
H950		"	9	20	4-10	1- 0				6-10	465
SX650		"	6	10	4- 9½	3- 7½	1- 0			14- 1	212
SX651		"	6	2	3- 5¾	9- 2⅛	1- 9			25- 4	76
V650		"	6	8	3- 3	1- 9	1- 2⅞	1- 2⅞		5- 0	60
V651		CANT.COLUMN	6	26	1- 9	1- 9	1- 7⅜	0- 8		3- 6	137
V850		"	8	3	15- 6½	2- 4½	2- 1½	1- 0¾		17-11	144
X650		CANT.CAP	6	4	4- 7¾	9- 1½	1- 0	0- 8½		24-11	150
Z650		CANT.COLUMN	6	60	1- 0	2- 0	0- 8			3- 8	330

***TOTAL WEIGHT (LBS) 2583

PIER 2 - W.B.L.

MARK	T	LOCATION	SZ	NO. RQ'D	a	b	c	d	e	LENGTH FT-IN	WEIGHT LBS
A350		RISER BLOCK	3	19	4-10					4-10	35
A351		"	3	11	9- 0					9- 0	37
A650		CANT.COLUMN	6	4	13-11¾					14- 0	84
A651		"	6	2	13-11¾					14- 0	175
		@ 7 BAR SERIES		EACH	TO					TO	
					2- 7½					2- 8	
A652		CANT.CAP	6	8	3- 6					3- 6	42
C850		"	8	5	8-11	3- 5½				12- 5	166
C851		"	8	2	9- 2½	1- 0				10- 3	55
F850		"	8	2	1- 4¼	0- 9	7- 0	0- 6¼	0- 6¼	9- 1	49
FC850		"	8	1	4- 5½	0-10⅜	3- 8	0- 9	3- 5½	12- 5	33
FC851		"	8	1	5- 1	0- 2	3- 8	0- 1¾	1- 0	9-11	26
FD850		"	8	1	4- 5¾	0-10⅜	3- 8	0- 9	3- 5½	12- 6	33
FD851		"	8	1	5- 1	0- 2	3- 8	0- 1¾	1- 0	9-11	26
H650		RISER BLOCK	5	10	2- 4	2- 2				6- 8	70
H650		CANT.COLUMN	6	1	2- 0	7- 4				16- 8	207
		@ 13 BAR SERIES		EACH		TO				TO	
						1- 3				4- 6	
H651		CANT.CAP	6	3	1- 0	4- 0				9- 0	41
H950		"	9	20	4-10	1- 0				6-10	465
SX650		"	6	10	4- 9½	3- 7½	1- 0			14- 1	212
SX651		"	6	2	3- 5¾	9- 2⅛	1- 9			25- 4	76
V650		"	6	8	3- 3	1- 9	1- 2⅞	1- 2⅞		5- 0	60
V651		CANT.COLUMN	6	26	1- 9	1- 9	1- 7⅜	0- 8		3- 6	137
V850		"	8	3	15- 6½	2- 4½	2- 1½	1- 0¾		17-11	144
X650		CANT.CAP	6	4	4- 7¾	9- 1½	1- 0	0- 8½		24-11	150
Z650		CANT.COLUMN	6	60	1- 0	2- 0	0- 8			3- 8	330

***TOTAL WEIGHT (LBS) 2660

PIER 3 - W.B.L.

MARK	T	LOCATION	SZ	NO. RQ'D	a	b	c	d	e	LENGTH FT-IN	WEIGHT LBS
A350		RISER BLOCK	3	19	3- 5					3- 5	24
A351		"	3	5	9- 1					9- 1	17
A550		"	5	4	9- 1					9- 1	38
A650		CANT.COLUMN	6	4	13-11¾					14- 0	84
A651		"	6	2	13-11¾					14- 0	175
		@ 7 BAR SERIES		EACH	TO					TO	
					2- 7½					2- 8	
A652		CANT.CAP	6	8	3- 6					3- 6	42
C850		"	8	5	8-11	3- 5½				12- 5	166
C851		"	8	2	9- 2½	1- 0				10- 3	55
F850		"	8	2	1- 4¼	0- 9	7- 0	0- 6¼	0- 6¼	9- 1	49
FC850		"	8	1	4- 5½	0-10⅜	3- 8	0- 9	3- 5½	12- 5	33
FC851		"	8	1	5- 1	0- 2	3- 8	0- 1¾	1- 0	9-11	26
FD850		"	8	1	4- 5¾	0-10⅜	3- 8	0- 9	3- 5½	12- 6	33
FD851		"	8	1	5- 1	0- 2	3- 8	0- 1¾	1- 0	9-11	26
H650		RISER BLOCK	5	10	2- 4	2- 2				6- 8	70
H650		CANT.COLUMN	6	1	2- 0	7- 4				16- 8	207
		@ 13 BAR SERIES		EACH		TO				TO	
						1- 3				4- 6	
H651		CANT.CAP	6	3	1- 0	4- 0				9- 0	41
H950		"	9	20	4-10	1- 0				6-10	465
SX650		"	6	10	4- 9½	3- 7½	1- 0			14- 1	212
SX651		"	6	2	3- 5¾	9- 2⅛	1- 9			25- 4	76
V650		"	6	8	3- 3	1- 9	1- 2⅞	1- 2⅞		5- 0	60
V651		CANT.COLUMN	6	26	1- 9	1- 9	1- 7⅜	0- 8		3- 6	137
V850		"	8	3	15- 6½	2- 4½	2- 1½	1- 0¾		17-11	144
X650		CANT.CAP	6	4	4- 7¾	9- 1½	1- 0	0- 8½		24-11	150
Z650		CANT.COLUMN	6	60	1- 0	2- 0	0- 8			3- 8	330

***TOTAL WEIGHT (LBS) 2660

ABUTMENT 2 W.B.L.

MARK	T	LOCATION	SZ	NO. RQ'D	a	b	c	d	e	LENGTH FT-IN	WEIGHT LBS
A441		WINGWALL 2	4	4	7- 2					7- 2	19
A540		ABUTMENT	5	132	3-11					3-11	540 ⚠
A541		"	5	5	24-4					24-4	127 ⚠
A542		WINGWALL 2	5	1	7- 8					7- 8	8
A544		ABUTMENT	5	7	8- 8					8- 8	63 ⚠
A545		ABUTMENT	5	1	18-7					18-7	19 ⚠
A940		WINGWALL 2	9	4	14- 6					14- 6	197
~~A1000~~		~~ABUTMENT~~	~~10~~	~~10~~	~~43- 8~~					~~43- 8~~	~~1879~~ ⚠
A1001		ABUTMENT	10	10	24-4					24-4	1047 ⚠
C440		WINGWALL 2	4	2	7- 8	0- 8				8- 4	11
C443		"	4	1	6-10	0- 8				7- 6	5
C444		"	4	1	5- 0	0- 8				5- 8	4
C445		WINGWALL 2	4	1	3- 2	0- 8				3-10	3
C546	E	ABUTMENT	5	84	10- 0	2-6				12-6	1095 ⚠
C542		"	5	8	24-4	0-10				25-2	210 ⚠
C543		WINGWALL 2	5	1	6-10	0-10				7- 8	30
		@ 5 BAR SERIES		EACH	TO					TO	
					3- 2					4- 0	
C544		"	5	4	7- 8	0-10				8- 6	35
E540		"	5	5	2- 1½	0-10	0- 7⅛	0- 7⅛		3-10	20
H442		WINGWALL 2	4	1	0- 9	6- 0				12- 9	26
		@ 4 BAR SERIES		EACH		TO				TO	
						3- 0				6- 9	
H443		"	4	2	0- 9	7- 2				15- 1	20
P540		ABUTMENT	5	84	7-2	0-9	6-2			14-1	1234 ⚠
H541		ABUTMENT	5	9	4- 2	0- 6				5- 2	48
L540	E	"	5	3	1- 9	3- 2	0- 6			10-10	34
L541		ABUTMENT	5	9	3- 8	3- 3	0- 6			14-10	139
P500		ABUTMENT	5	9	2- 8	3- 3	0-10			6- 9	63
RA440		WINGWALL 2	4	6	0- 8	1- 6	0- 9½	2- 1½	1- 6	5- 1	20
RA540		ABUTMENT	5	42	0-10	1- 9	0- 6	2- 5	1- 8½	5- 6	241
V440		WINGWALL 2	4	2	2- 4	6-10	5- 4	4- 3½		9- 2	12

FOR CONTINUATION SEE DRAWING M-214-166A

***TOTAL WEIGHT (LBS) 7430 ⚠

***TOTAL INCLUDES ⚠ 2254 LBS OF EPOXY COATED BARS

***TOTAL INCLUDES ⚠ 5176 LBS OF NON EPOXY COATED BARS

ABUTMENT 1 W.B.L. FOUNDATION REPAIR

MARK	T	LOCATION	SZ	NO. RQ'D	a	b	c	d	e	LENGTH FT-IN	WEIGHT LBS
A680	E	FD'N REPAIR	6	24	16-6					16-6	595 ⚠
C480	E	"	4	60	1-0	3-0				4-0	160

***TOTAL WEIGHT (LBS) 755 ⚠

***TOTAL INCLUDES ⚠ 755 LBS OF EPOXY COATED BARS

CONSTR. NO. 80001-3152-44

PROJECT NO.	YEAR	SHEET NO.
IR-40-5(91)257	1989	

REVISIONS

NO.	DATE	BY	BRIEF DESCRIPTION
⚠ 1	9/29/89	DWT	REVISED REINF.

REINFORCING STEEL CODE

TYPE	SIZE	SERIES
A	5	06*

Note: Dimensions shown on this sheet are outside to outside of bar. Standard C.R.S.I. Hook Details shall apply, except as noted.

*LOCATION	SERIES
SUPERSTRUCTURE	00
ABUTMENT	40
PIER	50
RETAINING WALL	70
APPROACH SLAB	90

Note: An 'E' in the 'T', Type, column indicates that the bar shall be Epoxy-Coated.

STATE OF TENNESSEE
DEPARTMENT OF TRANSPORTATION
BUREAU OF HIGHWAYS

BILL OF STEEL

I-40 OVER
CANEY FORK RIVER
STA. 518+50
℄ SURVEY E.B. & W.B. I-40
SMITH COUNTY
1989

DESIGNED BY _____ DATE 1-89
DRAWN BY _____ DATE 1-89
SUPERVISED BY W. S. HUFFSTETLER DATE 1-89
CHECKED BY _____ DATE _____

CORRECT _____ ENGINEER OF STRUCTURES
APPROVED _____ DIRECTOR OF HIGHWAYS

M-214-165

U.S.A. No. DTNOXX704A

ZFH598,241DTNOXX704A.DGN
DTNOXX
13-JAN-1989 11:54

SPAN A THRU D - EBL

MARK	T	LOCATION	SZ	NO. RQ'D	DIMENSIONS FT-IN a	b	c	d	e	LENGTH FT-IN	WEIGHT LBS
A500	E	DECK	5	473	4- 9					4- 9	2343
A501	E	"	5	473	10- 9					10- 9	5303
⚠ A502	E	"	5	106	8-10					8-10	977
A503	E	"	5	583	30- 0					30- 0	18242
A504	E	"	5	102	30- 6					30- 6	3245
A505	E	"	5	51	35- 6					35- 6	1888
⚠ B500	E	"	5	482	10- 0	0- 7				10- 7	5321
⚠ B501	E	"	5	243	25- 9	0- 7				26-4	6674
⚠ B502	E	"	5	243	19-10	0- 7				20-5	5175
									***TOTAL WEIGHT (LBS) ⚠		49168

⚠ ***TOTAL INCLUDES 49168 LBS OF EPOXY COATED BARS

ABUTMENT 1 E.B.L.

MARK	T	LOCATION	SZ	NO. RQ'D	DIMENSIONS FT-IN a	b	c	d	e	LENGTH FT-IN	WEIGHT LBS
A440		WINGWALL 1	4	4	5- 9					5- 9	15
A540		ABUTMENT	5	90	3- 8					3- 8	344
⚠ A541		ABUTMENT	5	5	24-4					24-4	127
A542		WINGWALL 1	5	1	7- 8					7- 8	8
A543		ABUTMENT	5	7	3- 6					3- 6	26
A544		"	5	3	6- 2					6- 2	19
⚠ A545		ABUTMENT	5	1	18-7					18-7	19
⚠ A740	E	"	7	4	19-4					19-4	158
⚠ A741		"	7	2	19-4					19-4	80
A940		WINGWALL 1	9	4	14- 6					14- 6	197
C440		"	4	2	7- 8	0- 8				8- 4	11
C441		"	4	1	7- 0	0- 8				7- 8	5
C442		"	4	1	4- 2	0- 8				4-10	3
C540	E	ABUTMENT	5	45	10- 0	0-10				10-10	508
C541		WINGWALL	5	1	7- 0	0-10				7-10	24
		@ 4 BAR SERIES		EACH	TO					TO	
					2- 9					3- 7	
⚠ C542		ABUTMENT	5	7	24-4	0-10				25-2	184
C544		WINGWALL 1	5	4	7- 8	0-10				8- 6	35
C545		ABUTMENT	5	7	3- 2	0-10				4- 0	29
E540		WINGWALL 1	5	4	2- 1½	0-10	0- 7⅛	0- 7⅛		3-10	16
H440		"	4	1	0- 9	3- 0				6- 9	24
		@ 4 BAR SERIES		EACH		TO				TO	
						5- 1				10-11	
H441		"	4	2	0- 9	5- 8				12- 1	16
H540		ABUTMENT	5	45	0- 9	5- 8				12- 1	567
L540	E	"	5	3	1- 9	3- 2	0- 6			10-10	34
RA440		WINGWALL 1	4	6	0- 8	1- 6	0- 9½	2- 1½	1- 6	5- 1	20
RA540		ABUTMENT	5	42	0-10	1- 9	0- 6	2- 5	1- 8½	5- 6	241
V441		WINGWALL 1	4	2	2- 4	6- 0	5- 4	2- 9		8- 4	11

⚠ FOR CONTINUATION SEE DRAWING NO. M-214-166A

***TOTAL WEIGHT (LBS) 3241

***TOTAL INCLUDES 899 LBS OF EPOXY COATED BARS

***TOTAL INCLUDES 2342 LBS OF NON EPOXY COATED BARS

PIER 1 - E.B.L.

MARK	T	LOCATION	SZ	NO. RQ'D	DIMENSIONS FT-IN a	b	c	d	e	LENGTH FT-IN	WEIGHT LBS
A350		RISER BLOCK	3	19	3- 5					3- 5	24
A351		"	3	5	9- 1					9- 1	17
A550		"	5	4	9- 1					9- 1	38
A650		CANT.COLUMN	6	4	13-11¾					14- 0	84
A651		"	6	2	13-11¾					14- 0	175
		@ 7 BAR SERIES		EACH	TO					TO	
					2- 7½					2- 8	
A652		CANT.CAP	6	8	3- 6					3- 6	42
C850		"	8	5	8-11	3- 5½				12- 5	166
C851		"	8	2	9- 2½	1- 0				10- 3	55
F850		"	8	2	1- 4¼	0- 9	7- 0	0- 6¼	0- 6¼	9- 1	49
FC850		"	8	1	4- 5½	0-10⅜	3- 8	0- 9	3- 5½	12- 5	33
FC851		"	8	1	5- 1	0- 2	3- 8	0- 1¾	1- 0	9-11	26
FD850		"	8	1	4- 5¾	0-10⅜	3- 8	0- 9	3- 5½	12- 6	33
FD851		"	8	1	5- 1	0- 2	3- 8	0- 1¾	1- 0	9-11	26
H550		RISER BLOCK	5	10	2- 4	2- 2				6- 8	70
H650		CANT.COLUMN	6	1	2- 0	7- 4				16- 8	207
		@ 13 BAR SERIES		EACH		TO				TO	
						1- 3				4- 6	
H651		CANT.CAP	6	3	1- 0	4- 0				9- 0	41
H950		"	9	20	4-10	1- 0				6-10	465

PIER 1 - E.B.L.

MARK	T	LOCATION	SZ	NO. RQ'D	DIMENSIONS FT-IN a	b	c	d	e	LENGTH FT-IN	WEIGHT LBS
SX650		"	6	10	4- 9½	3- 7½	1- 0			14- 1	212
SX651		"	6	2	3- 5¾	9- 2⅛	1- 9			25- 4	76
V650		"	6	8	3- 3	1- 9	1- 2⅞	1- 2⅞		5- 0	60
V651		CANT.COLUMN	6	26	1- 9	1- 9	1- 7⅜	0- 8		3- 6	137
V850		"	8	3	15- 6½	2- 4½	2- 1½	1- 0¾		17-11	144
X650		CANT.CAP	6	4	4- 7¾	9- 1½	1- 0	0- 8½		24-11	150
Z650		CANT.COLUMN	6	60	1- 0	2- 0	0- 8			3- 8	330
									***TOTAL WEIGHT (LBS)		2660

PIER 2 - E.B.L.

MARK	T	LOCATION	SZ	NO. RQ'D	DIMENSIONS FT-IN a	b	c	d	e	LENGTH FT-IN	WEIGHT LBS
A350		RISER BLOCK	3	19	4-10					4-10	35
A351		"	3	11	9- 0					9- 0	37
A650		CANT.COLUMN	6	4	13-11¾					14- 0	84
A651		"	6	2	13-11¾					14- 0	175
		@ 7 BAR SERIES		EACH	TO					TO	
					2- 7½					2- 8	
A652		CANT.CAP	6	8	3- 6					3- 6	42
C850		"	8	5	8-11	3- 5½				12- 5	166
C851		"	8	2	9- 2½	1- 0				10- 3	55
F850		"	8	2	1- 4¼	0- 9	7- 0	0- 6¼	0- 6¼	9- 1	49
FC850		"	8	1	4- 5½	0-10⅜	3- 8	0- 9	3- 5½	12- 5	33
FC851		"	8	1	5- 1	0- 2	3- 8	0- 1¾	1- 0	9-11	26
FD850		"	8	1	4- 5¾	0-10⅜	3- 8	0- 9	3- 5½	12- 6	33
FD851		"	8	1	5- 1	0- 2	3- 8	0- 1¾	1- 0	9-11	26
H550		RISER BLOCK	5	10	2- 4	2- 2				6- 8	70
H650		CANT.COLUMN	6	1	2- 0	7- 4				16- 8	207
		@ 13 BAR SERIES		EACH		TO				TO	
						1- 3				4- 6	
H651		CANT.CAP	6	3	1- 0	4- 0				9- 0	41
H950		"	9	20	4-10	1- 0				6-10	465
SX650		"	6	10	4- 9½	3- 7½	1- 0			14- 1	212
SX651		"	6	2	3- 5¾	9- 2⅛	1- 9			25- 4	76
V650		"	6	8	3- 3	1- 9	1- 2⅞	1- 2⅞		5- 0	60
V651		CANT.COLUMN	6	26	1- 9	1- 9	1- 7⅜	0- 8		3- 6	137
V850		"	8	3	15- 6½	2- 4½	2- 1½	1- 0¾		17-11	144
X650		CANT.CAP	6	4	4- 7¾	9- 1½	1- 0	0- 8½		24-11	150
Z650		CANT.COLUMN	6	60	1- 0	2- 0	0- 8			3- 8	330
									***TOTAL WEIGHT (LBS)		2583

PIER 3 - E.B.L.

MARK	T	LOCATION	SZ	NO. RQ'D	DIMENSIONS FT-IN a	b	c	d	e	LENGTH FT-IN	WEIGHT LBS
A350		RISER BLOCK	3	19	3- 5					3- 5	24
A351		"	3	5	9- 1					9- 1	17
A550		"	5	4	9- 1					9- 1	38
A650		CANT.COLUMN	6	4	13-11¾					14- 0	84
A651		"	6	2	13-11¾					14- 0	175
		@ 7 BAR SERIES		EACH	TO					TO	
					2- 7½					2- 8	
A652		CANT.CAP	6	8	3- 6					3- 6	42
C850		"	8	5	8-11	3- 5½				12- 5	166
C851		"	8	2	9- 2½	1- 0				10- 3	55
F850		"	8	2	1- 4¼	0- 9	7- 0	0- 6¼	0- 6¼	9- 1	49
FC850		"	8	1	4- 5½	0-10⅜	3- 8	0- 9	3- 5½	12- 5	33
FC851		"	8	1	5- 1	0- 2	3- 8	0- 1¾	1- 0	9-11	26
FD850		"	8	1	4- 5¾	0-10⅜	3- 8	0- 9	3- 5½	12- 6	33
FD851		"	8	1	5- 1	0- 2	3- 8	0- 1¾	1- 0	9-11	26
H550		RISER BLOCK	5	10	2- 4	2- 2				6- 8	70
H650		CANT.COLUMN	6	1	2- 0	7- 4				16- 8	207
		@ 13 BAR SERIES		EACH		TO				TO	
						1- 3				4- 6	
H651		CANT.CAP	6	3	1- 0	4- 0				9- 0	41
H950		"	9	20	4-10	1- 0				6-10	465
SX650		"	6	10	4- 9½	3- 7½	1- 0			14- 1	212
SX651		"	6	2	3- 5¾	9- 2⅛	1- 9			25- 4	76
V650		"	6	8	3- 3	1- 9	1- 2⅞	1- 2⅞		5- 0	60
V651		CANT.COLUMN	6	26	1- 9	1- 9	1- 7⅜	0- 8		3- 6	137
V850		"	8	3	15- 6½	2- 4½	2- 1½	1- 0¾		17-11	144
X650		CANT.CAP	6	4	4- 7¾	9- 1½	1- 0	0- 8½		24-11	150
Z650		CANT.COLUMN	6	60	1- 0	2- 0	0- 8			3- 8	330
									***TOTAL WEIGHT (LBS)		2660

ABUTMENT 2 E.B.L.

MARK	T	LOCATION	SZ	NO. RQ'D	DIMENSIONS FT-IN a	b	c	d	e	LENGTH FT-IN	WEIGHT LBS
A441		WINGWALL 2	4	4	7- 2					7- 2	19
A540		ABUTMENT	5	132	3-11					3-11	540
⚠ A541		"	5	5	24-4					24-4	127
A542		WINGWALL 2	5	1	7- 8					7- 8	8
A544		ABUTMENT	5	7	8- 8					8- 8	63
⚠ A545		ABUTMENT	5	1	18-7					18-7	19
A940		WINGWALL 2	9	4	14- 6					14- 6	197
~~A1000~~		~~ABUTMENT~~	~~10~~	~~10~~	~~43- 8~~					~~43- 8~~	~~1879~~
⚠ A1001		ABUTMENT	10	10	24-4					24-4	1047
C440		WINGWALL 2	4	2	7- 8	0- 8				8- 4	11
C443		"	4	1	6-10	0- 8				7- 6	5
C444		"	4	1	5- 0	0- 8				5- 8	4
C445		WINGWALL 2	4	1	3- 2	0- 8				3-10	3
⚠ C546	E	ABUTMENT	5	84	10- 0	2- 6				12-6	1095
⚠ C542		"	5	8	24-4	0-10				25-2	210
C543		WINGWALL 2	5	1	6-10	0-10				7- 8	30
		@ 5 BAR SERIES		EACH	TO					TO	
					3- 2					4- 0	
C544		"	5	4	7- 8	0-10				8- 6	35
E540		"	5	5	2- 1½	0-10	0- 7⅛	0- 7⅛		3-10	20
H442		WINGWALL 2	4	1	0- 9	6- 0				12- 9	26
		@ 4 BAR SERIES		EACH		TO				TO	
						3- 0				6- 9	
H443		"	4	2	0- 9	7- 2				15- 1	20
P540	E	ABUTMENT	5	84	7-2	0-5	6-2			14-1	1234
H541		ABUTMENT	5	9	4- 2	0- 6				5- 2	48
L540	E	"	5	3	1- 9	3- 2	0- 6			10-10	34
L541		ABUTMENT	5	9	3- 8	3- 3	0- 6			14-10	139
P500		ABUTMENT	5	9	2- 8	3- 3	0-10			6- 9	63
RA440		WINGWALL 2	4	6	0- 8	1- 6	0- 9½	2- 1½	1- 6	5- 1	20
RA540		ABUTMENT	5	42	0-10	1- 9	0- 6	2- 5	1- 8½	5- 6	241
V440		WINGWALL 2	4	2	2- 4	6-10	5- 4	4- 3½		9- 2	12

⚠ FOR CONTINUATION SEE SHEET M-214-166A

***TOTAL WEIGHT (LBS) 7430 ⚠

***TOTAL INCLUDES ⚠ 2254 LBS OF EPOXY COATED BARS

***TOTAL INCLUDES ⚠ 5176 LBS OF NON EPOXY COATED BARS

ABUTMENT 1 E.B.L. FOUNDATION REPAIR

MARK	T	LOCATION	SZ	NO. RQ'D	DIMENSIONS FT-IN a	b	c	d	e	LENGTH FT-IN	WEIGHT LBS
A680	E	FD'N REPAIR	6	24	16-6					16-6	595 ⚠
C480	E	"	4	60	1-0	3-0				4-0	160
									***TOTAL WEIGHT (LBS)		755 ⚠

***TOTAL INCLUDES ⚠ 755 LBS OF EPOXY COATED BARS

CONSTR. NO. 80001-3152-44

PROJECT NO.	YEAR	SHEET NO.
IR-40-5(91)257	1989	

REVISIONS

NO.	DATE	BY	BRIEF DESCRIPTION
⚠1	9/25/89	DWT	REVISED REINF.

REINFORCING STEEL CODE

TYPE	SIZE	SERIES
A	5	06*

Note: Dimensions shown on this sheet are outside to outside of bar. Standard C.R.S.I. Hook Details shall apply, except as noted.

*LOCATION	SERIES
SUPERSTRUCTURE	00
ABUTMENT	40
PIER	50
RETAINING WALL	70
APPROACH SLAB	90

Note: An 'E' in the 'T', Type, column indicates that the bar shall be Epoxy-Coated.

STATE OF TENNESSEE
DEPARTMENT OF TRANSPORTATION
BUREAU OF HIGHWAYS

BILL OF STEEL

I-40 OVER
CANEY FORK RIVER
STA. 518+50
℄ SURVEY E.B. & W.B. I-40
SMITH COUNTY
1989

DESIGNED BY _____ DATE 1-89
DRAWN BY _____ DATE 1-89
SUPERVISED BY W. S. HUFFSTETLER DATE 1-89
CHECKED BY _____ DATE _____

CORRECT _____
ENGINEER OF STRUCTURES
APPROVED _____
DIRECTOR OF HIGHWAYS

M-214-166

W.S.A. No.: TNCKXREV 38

ZFN:ESB.241TNWXNEWLDRN1
DTN:WXX
12-SEP-1989 14:08

MARK	T	LOCATION	SZ	NO. RQ'D	DIMENSIONS FT-IN a	b	c	d	e	LENGTH FT-IN	WEIGHT LBS
BRIDGE 1 SUPERSTRUCTURE-SPANS A THRU C (EBL) (CONTINUED)											
A511	E	DECK	5	1	25- 7					25- 7	692
		@ 46 BAR SERIES		EACH	TO					TO	
					3- 3					3- 3	
A512	E	"	5	1	19- 8					19- 8	406
		@ 34 BAR SERIES		EACH	TO					TO	
					3- 3					3- 3	
B504	E	"	5	1	25- 8	0- 7				26- 3	720
		@ 45 BAR SERIES		EACH	TO					TO	
					3-10					4- 5	
BRIDGE 3 SUPERSTRUCTURE-SPANS A THRU E (WBL) (CONTINUED)											
A515	E	DECK	5	1	19- 2					19- 2	362
		@ 31 BAR SERIES		EACH	TO					TO	
					3- 3					3- 3	
A516	E	"	5	1	25- 1					25- 1	615
		@ 41 BAR SERIES		EACH	TO					TO	
					3- 8					3- 8	
A517	E	"	5	1	17- 8					17- 8	305
		@ 28 BAR SERIES		EACH	TO					TO	
					3- 3					3- 3	
A518	E	"	5	1	23- 7					23- 7	543
		@ 38 BAR SERIES		EACH	TO					TO	
					3-10					3-10	
A519	E	DROP BEAM	5	4	22- 8					22- 8	95
A702	E	"	7	2	24- 8					24- 8	101
A703	E	"	7	2	30- 9					30- 9	126
A801	E	"	8	3	22- 1					22- 1	177
A802	E	"	8	3	24- 8					24- 8	198
A803	E	"	8	3	30- 9					30- 9	246
B502	E	DECK	5	977	25- 9	0- 7				26- 4	26834
B503	E	"	5	999	19-10	0- 7				20- 5	21273
B504	E	"	5	1	19- 8	0- 7				20- 3	391
		@ 30 BAR SERIES		EACH	TO					TO	
					4- 2					4- 9	
B505	E	"	5	1	19- 8	0- 7				20- 3	380
		@ 28 BAR SERIES		EACH	TO					TO	
					5- 2					5- 9	
BRIDGE 3 SUPERSTRUCTURE-SPANS A THRU E (EBL) (CONTINUED)											
A515	E	DECK	5	1	19- 2					19- 2	362
		@ 31 BAR SERIES		EACH	TO					TO	
					3- 3					3- 3	
A516	E	"	5	1	25- 1					25- 1	615
		@ 41 BAR SERIES		EACH	TO					TO	
					3- 8					3- 8	
A517	E	"	5	1	17- 8					17- 8	305
		@ 28 BAR SERIES		EACH	TO					TO	
					3- 3					3- 3	
A518	E	"	5	1	23- 7					23- 7	543
		@ 38 BAR SERIES		EACH	TO					TO	
					3-10					3-10	
A519	E	DROP BEAM	5	4	22- 8					22- 8	95
A702	E	"	7	2	24- 8					24- 8	101
A703	E	"	7	2	30- 9					30- 9	126
A801	E	"	8	3	22- 1					22- 1	177
A802	E	"	8	3	24- 8					24- 8	198
A803	E	"	8	3	30- 9					30- 9	246
B502	E	DECK	5	973	25- 9	0- 7				26- 4	26724
B503	E	"	5	995	19-10	0- 7				20- 5	21188
B504	E	"	5	1	19- 8	0- 7				20- 3	391
		@ 30 BAR SERIES		EACH	TO					TO	
					4- 2					4- 9	

MARK	T	LOCATION	SZ	NO. RQ'D	DIMENSIONS FT-IN a	b	c	d	e	LENGTH FT-IN	WEIGHT LBS
BRIDGE 3 SUPERSTRUCTURE-SPANS A THRU E (EBL) (CONTINUED)											
B505	E	"	5	1	19- 8	0- 7				20- 3	380
		@ 28 BAR SERIES		EACH	TO					TO	
					5- 2					5- 9	
BRIDGE 3-ABUTMENT 1 (WBL) (CONTINUED)											
A558		ABUTMENT	5	3	24- 8					24- 8	77
A942		"	9	3	23- 8					23- 8	241
A1002	E	"	10	6	24- 8					24- 8	637
A1003		"	10	8	30- 8					30- 8	1056
A1004		"	10	6	23- 2					23- 2	598
BRIDGE 3-ABUTMENT 2 (WBL) (CONTINUED)											
A558		ABUTMENT	5	3	24- 8					24- 8	77
A942		"	9	3	23- 8					23- 8	241
A1002	E	"	10	6	24- 8					24- 8	637
A1003		"	10	8	30- 8					30- 8	1056
A1004		"	10	6	23- 2					23- 2	598
BRIDGE 3-ABUTMENT 1 (EBL) (CONTINUED)											
A558		ABUTMENT	5	3	24- 8					24- 8	77
A942		"	9	3	23- 8					23- 8	241
A1002	E	"	10	6	24- 8					24- 8	637
A1003		"	10	8	30- 8					30- 8	1056
A1004		"	10	6	23- 2					23- 2	598
BRIDGE 3-ABUTMENT 2 (EBL) (CONTINUED)											
A558		ABUTMENT	5	3	24- 8					24- 8	77
A942		"	9	3	23- 8					23- 8	241
A1002	E	"	10	6	24- 8					24- 8	637
A1003		"	10	8	30- 8					30- 8	1056
A1004		"	10	6	23- 2					23- 2	598
BRIDGE 6-ABUTMENT 1 (WBL) (CONTINUED)											
A546		ABUTMENT	5	11	19- 4					19- 4	222
A742	E	"	7	4	24- 4					24- 4	199
A743		"	7	2	24- 4					24- 4	99

MARK	T	LOCATION	SZ	NO. RQ'D	DIMENSIONS FT-IN a	b	c	d	e	LENGTH FT-IN	WEIGHT LBS
BRIDGE 6-ABUTMENT 2 (WBL) (CONTINUED)											
A546		ABUTMENT	5	12	19- 4					19- 4	242
A1002		"	10	6	17-10					17-10	460
A1003		"	10	4	19- 4					19- 4	333
A1004	E	"	10	6	19- 4					19- 4	499
A1005	E	"	10	6	24- 3					24- 3	626
BRIDGE 6-ABUTMENT 1 (EBL) (CONTINUED)											
A546		ABUTMENT	5	11	19- 4					19- 4	222
A742	E	"	7	4	24- 4					24- 4	199
A743		"	7	2	24- 4					24- 4	99
BRIDGE 6-ABUTMENT 2 (EBL) (CONTINUED)											
A546		"	5	12	19- 4					19- 4	242
A1002		"	10	6	17-10					17-10	460
A1003		"	10	4	19- 4					19- 4	333
A1004	E	"	10	6	19- 4					19- 4	499
A1005	E	"	10	6	24- 3					24- 3	626

CONSTR. NO. 80001-3152-44

PROJECT NO.	YEAR	SHEET NO.
IR-40-5(91)257	1989	

REVISIONS

NO.	DATE	BY	BRIEF DESCRIPTION
1	9/29/89	DWT	THIS SHEET ADDED

REINFORCING STEEL CODE

TYPE	SIZE	SERIES
A	5	06*

Note: Dimensions shown on this sheet are outside to outside of bar. Standard C.R.S.I. Hook Details shall apply, except as noted.

*LOCATION	SERIES
SUPERSTRUCTURE	00
ABUTMENT	40, 60-80
PIER	50

Note: An 'E' in the 'T', Type, column indicates that the bar shall be Epoxy-Coated.

STATE OF TENNESSEE
DEPARTMENT OF TRANSPORTATION
BUREAU OF HIGHWAYS

BILL OF STEEL
BRIDGE NO. 1, 3 & 6
I-40 OVER CANEY FORK RIVER
℄ I-40 OVER HICKMAN CREEK
SMITH COUNTY
1989

DESIGNED BY DWT DATE 9/89
DRAWN BY EAB DATE 9/89
SUPERVISED BY WSH DATE 9/89
CHECKED BY DWT DATE 9/89

CORRECT _____ ENGINEER OF STRUCTURES
APPROVED _____ DIRECTOR OF HIGHWAYS

M-214-166A

U.S.A. No. DTNOXX705A

ZF:4590,24:DTNOXX7B5.DGN;1
DTNOXX
17-FEB-1989 13:06

CONSTR. NO. 80001-3152-44

PROJECT NO.	YEAR	SHEET NO.
IR-40-5(91)257	1989	

REVISIONS

NO.	DATE	BY	BRIEF DESCRIPTION

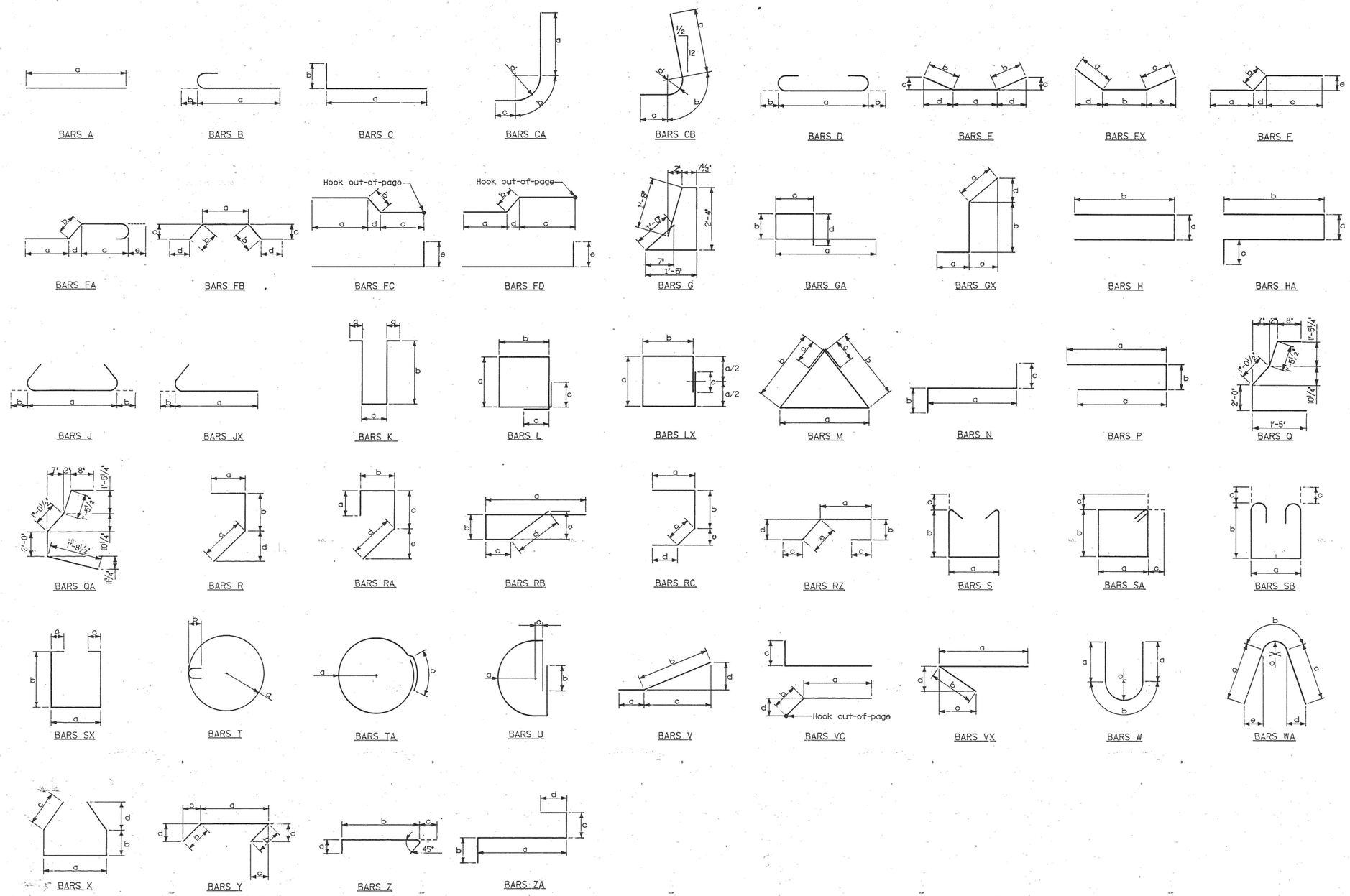

DESIGNED BY W. S. HUFFSTETLER DATE 1-89
DRAWN BY EAB DATE 1-89
SUPERVISED BY W. S. HUFFSTETLER DATE 1-89
CHECKED BY DWT DATE 2-89

STATE OF TENNESSEE
DEPARTMENT OF TRANSPORTATION
BUREAU OF HIGHWAYS

REINFORCING STEEL BAR BENDING DETAILS

I-40 OVER
CANEY FORK RIVER
STA. 518+49.00
℄ SURVEY E.B. & W.B. I-40
SMITH COUNTY
1989

CORRECT _____
ENGINEER OF STRUCTURES

APPROVED _____
DIRECTOR OF HIGHWAYS

M-214-167

Const. NO, 80001-3152-44

PROJECT NO.	YEAR	SHEET NO.
IR-40-S(91) 257	1989	

REVISIONS

NO.	DATE	BY	BRIEF DESCRIPTION
	6/12/89	WHP	added Sheet
2	8/1/89	WHP	Removed Notes
3	9-14-89	DWT	Note Added & Removed

Stage construction for Bridges NO. 1, 3, 4, and 5

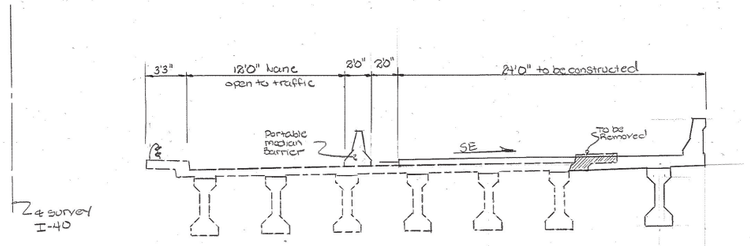

Phase I
EBL

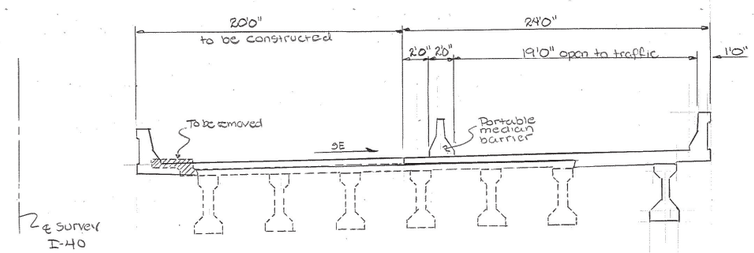

Phase II

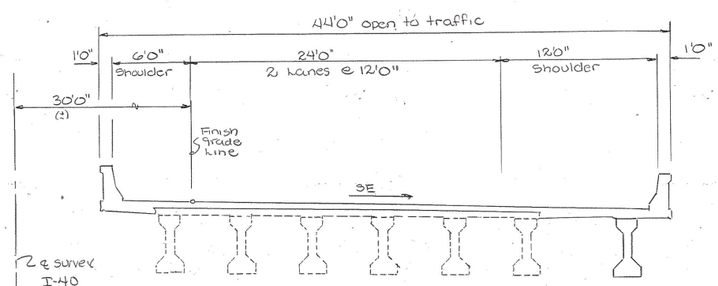

Phase III
(open to traffic)

Stage construction for Bridge NO. 2 and 6

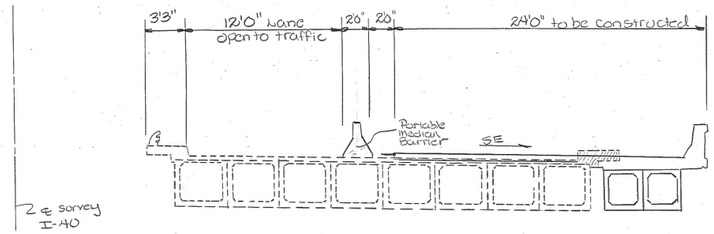

Phase I

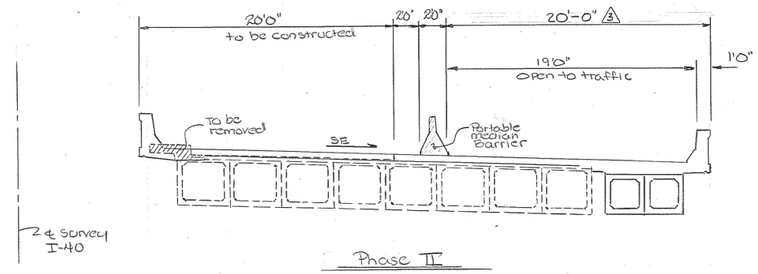

Phase II

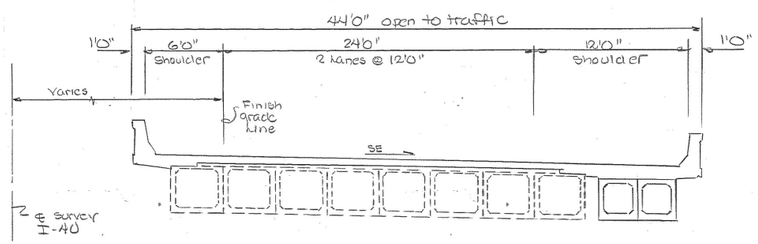

Phase III
open to traffic

Notes Regarding Construction Sequence and maintainence of traffic

1) See Special Provision 108B

2

3 Note: Pier Bracket Construction in it's entirety shall be included in Phase I Construction.

3 Construction stages for approach pavements shall be identical to slab stages. Provide a 1'-6" lap at the construction joint for all bars A490. Bars A790 shall be mechanically coupled at the construction joint using a coupler in accordance with AASHTO 8.32.2.3 and General Notes drawing.

3

STATE OF TENNESSEE
DEPARTMENT OF TRANSPORTATION
BUREAU OF HIGHWAYS

Construction Sequence
I-40 Bridge widenings
Smith County
1989

DESIGNED BY _____ DATE _____
DRAWN BY H. Pate DATE 10/5/89
SUPERVISED BY _____ DATE _____
CHECKED BY _____ DATE _____

CORRECT _____
ENGINEER OF STRUCTURES

APPROVED _____
DIRECTOR OF HIGHWAYS

M-214-59A

TELESTYNE PLOT F08251